Panasonic

Operating Instructions

Memory Card Camera-Recorder

P2HD

Model No. AJ-HPX3000G

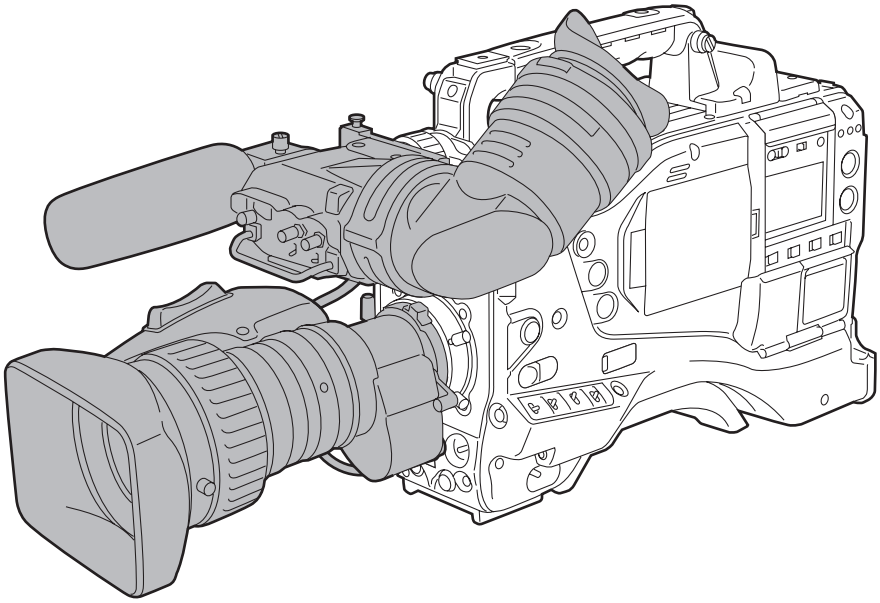

SDHC

AVC-INTRA DVCPRO HD DVCPRO 50

Before operating this product, please read the insructions carefully and save this manual for future use.

F0807T0 -F D
Printed in Japan

ENGLISH
VQT1K82

Read this first!

CAUTION

RISK OF ELECTRIC SHOCK DO NOT OPEN

CAUTION: TO REDUCE THE RISK OF ELECTRIC SHOCK, DO NOT REMOVE COVER (OR BACK). NO USER SERVICEABLE PARTS INSIDE. REFER TO SERVICING TO QUALIFIED SERVICE PERSONNEL.

The lightning flash with arrowhead symbol, within an equilateral triangle, is intended to alert the user to the presence of uninsulated "dangerous voltage" within the product's enclosure that may be of sufficient magnitude to constitute a risk of electric shock to persons.

The exclamation point within an equilateral triangle is intended to alert the user to the presence of important operating and maintenance (service) instructions in the literature accompanying the appliance.

WARNING:

- **TO REDUCE THE RISK OF FIRE OR SHOCK HAZARD, DO NOT EXPOSE THIS EQUIPMENT TO RAIN OR MOISTURE.**
- **TO REDUCE THE RISK OF FIRE OR SHOCK HAZARD, KEEP THIS EQUIPMENT AWAY FROM ALL LIQUIDS. USE AND STORE ONLY IN LOCATIONS WHICH ARE NOT EXPOSED TO THE RISK OF DRIPPING OR SPLASHING LIQUIDS, AND DO NOT PLACE ANY LIQUID CONTAINERS ON TOP OF THE EQUIPMENT.**

CAUTIONS:

TO REDUCE THE RISK OF FIRE OR SHOCK HAZARD AND ANNOYING INTERFERENCE, USE THE RECOMMENDED ACCESSORIES ONLY.

CAUTIONS:

In order to maintain adequate ventilation, do not install or place this unit in a bookcase, built-in cabinet or any other confined space. To prevent risk of electric shock or fire hazard due to overheating, ensure that curtains and any other materials do not obstruct the ventilation.

CAUTION:

This equipment has been tested and found to comply with the limits for a Class B digital device, pursuant to Part 15 of the FCC Rules. These limits are designed to provide reasonable protection against harmful interference in a residential installation. This equipment generates, uses and can radiate radio frequency energy, and if not installed and used in accordance with the instructions, may cause harmful interference to radio communications. However, there is no guarantee that interference will not occur in a particular installation. If this equipment does cause harmful interference to radio or television reception, which can be determined by turning the equipment off and on, the user is encouraged to try to correct the interference by one of the following measures:

- Reorient or relocate the receiving antenna.
- Increase the separation between the equipment and receiver.
- Connect the equipment into an outlet on a circuit different from that to which the receiver is connected.
- Consult the dealer or an experienced radio/TV technician for help.

The user may find the booklet "Something About Interference" available from FCC local regional offices helpful.

FCC Warning: To assure continued FCC emission limit compliance, the user must use only shielded interface cables when connecting to host computer or peripheral devices. Also, any unauthorized changes or modifications to this equipment could void the user's authority to operate this device.

Declaration of Conformity

Model Number: AJ-HPX3000G
Trade Name: PANASONIC
Responsible Party: Panasonic Corporation of North America
One Panasonic Way, Secaucus, NJ 07094
Support contact: Panasonic Broadcast & Television Systems Company 1-800-524-1448

This device complies with Part 15 of FCC Rules. Operation is subject to the following two conditions:
(1) This device may not cause harmful interference, and (2) this device must accept any interference received, including interference that may cause undesired operation.
To assure continued compliance, follow the attached installation instructions and do not make any unauthorized modifications.

CAUTIONS:

TO REDUCE THE RISK OF FIRE OR SHOCK HAZARD, REFER MOUNTING OF OPTIONAL INTERFACE BOARDS TO QUALIFIED SERVICE PERSONNEL.

indicates safety information.

A rechargeable battery that is recyclable powers the product you have purchased.

<For USA-California Only>
This product contains a CR Coin Cell Lithium Battery which contains Perchlorate Material — special handling may apply. See www.dtsc.ca/gov/hazardouswaste.perchlorate.

Caution regarding laser beams

The CCD may be damaged if it is subjected to light from a laser beam.
When using the camera-recorder in locations where laser irradiation equipment is used, be careful not to allow the laser beam to shine directly on the lens.

Attention/Attentie

ENGLISH

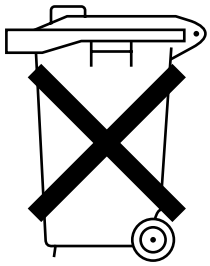

- Batteries are used for the main power source and memory back-up in the product.
  At the end of their useful life, you should not throw them away.
  Instead, hand them in as small chemical waste.

NERDERLAND

- Voor de primaire voeding en het reservegeheugen van het apparaat wordt gebruikgemaakt van een batterij.
  Wanneer de batterij is uitgeput, mag u deze niet gewoon weggooien, maar dient u deze als klein chemisch afval weg te doen.

TO REMOVE THE BATTERY

Main Power Battery (Ni-Cd / Ni-MH / Li-ion Battery)

- To detach the battery, please proceed in the reverse order of the installation method described in this manual.
- If a battery made by any other manufacturer is to be used, check the Operating Instructions accompanying the battery.

Back-up Battery (Lithium Battery)

- For the removal of the battery for disposal at the end of its service life, please consult your dealer.

PLEASE NOTE:

- When preparing to record important images, always shoot some advance test footage, to verify that both pictures and sound are being recorded normally.
- Should video or audio recording fail due to a malfunction of this camera-recorder or the P2 cards used, we will not assume liability for such failure.
- If the unit is operated continuously with the fan stopped due to a failure, camera images may not be output, recorded, or played back properly.

What to remember when throwing memory cards away or transferring them to others

Formatting memory cards or deleting data using the functions of the unit or a computer will merely change the file management information: it will not completely erase the data on the cards. When throwing these cards away or transferring them to others, either physically destroy them or use a data deletion program for computers (commercially available) to completely erase the data. Users are responsible for managing the data on their memory cards.

Contents

Read this first! 2

General

Features of Camera unit....8
Features of Recorder/player unit 9
Features of the Input/Output unit 11
Other features 12
Dimensions drawing 12
Color TV Standard Settings
(Settings for frame frequency) 13
System Configuration 14

Parts and their Functions

Power Supply and Accessory Mounting Section....15
Audio (input) Function Section 16
Audio (output) Function Section 17
Shooting and Recording/Playback Functions Section 18
Menu Operation Section 23
Time Code Section....24
Warning and Status Display Functions 25
Display Window Functions 26
LCD Monitor 27
Viewfinder 28

Recording and Playback

P2 Cards....30
How to handle data recorded on P2 cards....32
Basic Procedures 33
Normal Recording 35
PRE-RECORDING function 36
Loop Recording....37
Interval Recording 37
Recording Review Function....40
Normal and Variable Speed Playback 41
Text Memo Function 41
Shot Mark Function 42
Recording Setting and Operation Mode....42

Adjustments and Settings for Recording

Multi Format....43
Adjusting the White balance and Black Balance 45
Setting the Electronic Shutter 49

Assigning Functions to USER MAIN, USER1 and USER2 Buttons ..51
Selecting Audio Input Signals and Adjusting Recording Levels 53
Setting Time Data 55
Viewfinder Screen Status Displays 68
Adjusting and setting the LCD monitor 79
Selection of video output signals 80
Handling data 82
Chromatic Aberration Compensation (CAC) 97

Preparation

Power Supply 101
Mounting the lens and Performing the Flange Back and White Shading Adjustments 105
Preparing for Audio Input 108
Mounting the Camera on a Tripod 109
Attaching the Shoulder Strap 110
Attaching the Rain Cover 110
Connection of the remote control unit (AJ-RC10G) 111
Attaching the Front Audio Level Control Knob 111
Connection of the external switch 112

Manipulating Clips with Thumbnails

Thumbnail Manipulations Overview 113
Thumbnail Screen 114
Selecting Thumbnails 116
Playing back Clips 116
Switching the Thumbnail Display 117
Shot Mark 119
Text Memo 119
Deleting Clips 121
Restoring Clips 121
Reconnection of Incomplete Clips 122
Copying Clips 122
Setting of Clip Meta Data 123
Setting of Proxy (optional) 126
Formatting a P2 Card 126
Formatting SD memory cards 127
Setting the Thumbnail Display Mode 128
Properties 129

Connection with external device

Connection through the DVCPRO connector....133
Connection with external devices using the USB 2.0 port....135
Connection using the SDI IN connector (when AJ-YA350AG attached)....141

Maintenance and Inspections

Inspections Before Shooting....142
Maintenance....144
Warning System....149

Menu

Menu Configuration....155
Menu Description Tables....159

Updating the firmware incorporated into the camera-recorder.... 193

Specifications.... 194

General

Attention

Adjust the following three settings when using the unit for the first time.

- Adjust the black-balance setting when using the unit for the first time. (Refer to page 48)
- The unit is delivered from the factory with the color TV standard not yet specified. To revise the settings for frame frequency according to the TV standard, refer to the procedures described on page 13.
- Set VF TYPE on the <SYSTEM MODE> screen on the SYSTEM SETTING page depending on your viewfinder. The factory setting is set to the HD viewfinder.

The unit is a solid CCD camera recorder integrating 2/3-inch 2.2-megapixel components that support interlaced/progressive drive (reading all pixels) and record/playback that supports the compression format for AVC-Intra100, AVC-Intra50 and DVCPRO HD and DVCPRO50

The unit supports the HD and SD methods shown in the following table. The unit is also equipped with CAC (chromatic aberration correction function for the magnification ratio chromatic aberration of lenses), Scan Reverse (corrects images when Anamo lenses or lenses for film applications are used), and the film-like gamma function.

For recording, the compression and recording methods are selectable among AVC-Intrra100, AVC-Intra50, DVCPRO HD, and DVCPRO50. Since minimal image deterioration occurs when recording with AVC-Intra 100 compression in particular, high image quality can be retained.

■Supported formats

Mode	SYSTEM MODE	Shooting/Recording method	
HD	1080-59.94i	AVC-Intra100	59.94i 29.97P (Native) 23.98P (Native)
		AVC-Intra50	
		DVCPRO HD	59.94i 29.97P Over 59.94i 23.98P Over 59.94i (2-3 Pull down) 23.98PA Over 59.94i (2-3-3-2 Pull down)
	1080-50i	AVC-Intra100	50i 25P (Native)
		AVC-Intra50	
		DVCPRO HD	50i 25P over 50i
SD	480-59.94i	DVCPRO50	59.94i 29.97P Over 59.94i 23.98P Over 59.94i (2-3 Pull down) 23.98PA Over 59.94i (2-3-3-2 Pull down)
	576-50i	DVCPRO50	50i 25P Over 50i

Features of Camera unit

■ Multi-format

By applying the interlace drive/progressive drive (reading all pixels) to the 2.2-mega pixel CCD, the unit supports a variety of recording methods. (Refer to page 44)

■ Chromatic Aberration Compensation function

The unit is equipped with a function to correct the magnification ratio chromatic aberration of lenses caused by the fact that the refractive index in lenses varies with the wavelength of light (hereinafter referred to as chromatic aberration). By using this function, chromatic aberration around the lens can be corrected and high definition images can be obtained. However, a lens supporting chromatic aberration compensation is must be used. (Refer to page 97)

■ Scan Reverse function

The Scan Reverse function, as standard configuration, cancels the image inversion that occurs when a lens adapter from Canon or Angenieux is used, and it can be switched through the Menu settings. (Refer to page 159)

■ Film-like Gamma function

In order to obtain film tone in Varicam (AJ-HDC27 series), the unit is equipped with the FILM-REC gamma almost equivalent to Varicam. (Refer to page 171)

■ 2-disk 4-type configuration optical filters

The unit is equipped with CC filters for 3200K, 4300K, 5600K, and 6300K. The 5600K filter for outdoor recording is standard. (Refer to page 18)

■ 14-bit A/D conversion digital signal processing

Analog video signals are processed into digital data by a 14-bit A/D converter with sampling frequencies of 74 MHz. It is possible to reproduce images that are more finely detailed.

■ Storage type high-sensitivity function (DS. GAIN)

The unit uses the storage type gain increase function by driving the CCD progressively. With this function, it is possible to obtain brighter pictures without increasing noise under low light conditions.

This is a function that makes it possible to achieve higher sensitivity of up to 20 dB above the regular gain increase. Furthermore, this function can also be used as picture effects. (Refer to page 180)

■ DRS (Dynamic Range Stretcher) function

With this function, the dynamic range of high brightness areas that may be skipped with white blanks in an ordinary recording method can be expanded by compressing images and maintaining the contrast. (Refer to page 51)

■ Lens file function

The unit has 8 lens files.

By using an SD memory card, 64 lens files can be stored. (Refer to page 92)

■ Focus assist function

The unit will display a marker to help with focusing when shooting videos. This function provides a visual cue for focusing. (Refer to page 51)

■ Data management function

Within the unit, one user data file and four sets of scene file data can be saved.

By using an SD memory card as the setup cart, up to eight sets of setup data can be stored. (Refer to page 82)

■ Color bar

The unit employs the SMPTE color bar, ARIB color bar, Split color bar for SNG (Satellite News Gathering) as well as the conventional color bar, which is useful for adjusting the color monitor. (Refer to page 178)

Features of Recorder/player unit

■ Multiple Slots

AJ-HPX3000 is equipped with five slots for P2 cards. Up to five cards may be inserted in these slots for continuous recording. They also provide new recording capabilities specific to memory cards.

- **Hot-Swap recording**
  The Hot-Swap capability allows cards not in use to be replaced without interrupting recording. This facilitates continuous recording.
- **LOOP REC**
  AJ-HPX3000 can retain a certain amount of previously recorded material by continuously loop-recording data into a specified recording area.
- **INTERVAL REC/ONE SHOT REC**
  The AJ-HPX3000 features interval recording at minimum one-frame intervals. This function is particularly suited to shooting science and nature programs. Frame-by-frame shooting is simple with the one-shot recording function.
- **PRE-RECORDING function**
  In standby status, AJ-HPX3000 always stores video and sound input to the camera for up to 8 seconds. This means that the PRE-RECORDING function, when turned on, records the video and sound for a preceding duration preset by the user. This feature recovers critical moments that you might have missed.
- **Proxy recording (when AJ-YAX800G attached)**
  By installing the optional video encoder card (AJ-YAX800G), MPEG4 format video and real-time metadata such as time code data can be recorded simultaneously on the P2 card and the SD memory card, together with the video and sound recorded by the camera. This function is useful for confirmation of editing of clips. For more information about the approximate duration for proxy recording, see [Approximate Proxy Recording Time (optional) on SD memory cards] (page 11). Please also see <Cautions in using SD memory cards>. (page 22)
- **Data protection**
  Data on P2 cards will not be lost due to overwriting unless the files are deleted or the cards are initialised. Recordings are written only to free space.

■ HD: Format AVC-I100/AVC-I50/DVCPRO HD
SD: Format DVCPRO50

Recorded video is compressed through a component digital recording method that uses a state-of-the-art compression technology, and sound is recorded using the non-compression PCM recording method, which excels in such areas as S/N ratio, frequency bands, waveform properties and reproducibility of fine areas. These methods further enhance the quality of images and sound.

And it is also possible to select AVC (Advance Video Coding) compression of the ISO/IEC14496-10 standard in addition to DVCPRO HD in HD mode. The unit performs the in-frame compression.

It is also possible to select DVCPRO HD in addition to H.264/AVC Intra Profile compression in HD mode. The unit performs the in-frame compression.

◆Note

When the clip is played back in the format not selected on the menu, the picture may be disturbed until the format is detected.

■ 4-channel Digital Audio Recording (all formats)

In HD (1080i) mode, 4-channel digital audio recording is used.

All formats in SD mode also support 4-channel digital audio recording with high-quality sound (48 kHz/16 bits).

■ Clip Thumbnailing

- **Automatic generation of thumbnails**
  AJ-HPX3000 automatically generates a thumbnail for each recording cut (clip). It is possible to make use of this on the camera-recorder as well as for non-linear editing purposes, and after uploading to a server.
- **Thumbnail display on the LCD monitor**
  The 3.5-inch color LCD side of the your video camera recorder can provide a multi-screen view of 12 clip thumbnails. You can choose a desired clip to playback instantly.
- **Seamless playback of selected clips**
  You can select more than one clip from the thumbnail view for continuous playback and output of seamless video.

◆Note

During continuous playback of clips in different recording formats, seamless playback is not available.

- **Display of clip information**
  By selecting clips, information added to clips, such as the recording time, Text Memo, Shot Marks and metadata can be checked.

■ Text Memos & Shot Marks

Each clip can incorporate comments, in the form of text memo added to the thumbnail associated with the time code, together with shot marks which, for example, can help you distinguish OK cuts from reject cuts.

Both text memos and shot marks can be added to selected clips during and after a recording. This is helpful for editing recorded video.

In addition, you can use the copy function for each text memo block to take only the necessary portions out of a clip.

■ Front-mounted Sound Level Control Mechanism

AJ-HPX3000 features a front-mounted control for fine adjustment of the sound recording level. This control is particularly effective for adjusting the sound level when you are shooting without a sound recordist. The control can be disabled. (Refer to page 16)

■ Support for Built-in Unislot Wireless Receive

AJ-HPX3000 is designed to support an optional slot-in wireless receiver. (Refer to page 108)

■ Recording Review Capability

This capability automatically plays back the last 2 to 10 seconds of recorded video, allowing you to quickly check the recorded contents.

■ Built-in Time Code Generator/reader

A special-purpose Subcode track can be used to record and reproduce time code information.

■ Support for Metadata

AJ-HPX3000 is capable of recording positional information (latitudes, longitudes and altitudes), as UMID information (metadata), from the GPS unit AJ-GPS910G (optional accessory). Names/titles can also be recorded, e.g. the camera person, the reporter, or the program which was registered on the SD memory card in advance. This information is also useful in managing information on clips. Regarding SD memory cards, please also see <Cautions in using SD memory cards> (page 22).

■ Recording Time

Operation of the following P2 cards with AJ-HPX3000 has been verified:

- AJ-P2C004HG (4 GB)
- AJ-P2C008HG (8 GB)
- AJ-P2C016RG (16 GB)

(The model numbers and capacities are accurate as of August 2007 but may change to expand capacity.)

The AJ-P2C002SG (2 GB) is disabled.

Recording Time on P2 Cards: When one 16 GB card is used; HD Mode

Image system	Recording method and Recording time		
	DVCPRO HD	AVC-Intra100	AVC-Intra50
1080-59.94i/ 50i*1	Approx. 16 minutes	Approx. 16 minutes	Approx. 32 minutes
1080-30PN/ 25PN (Native)	—	Approx. 16 minutes	Approx. 32 minutes
1080-24PN (Native)	—	Approx. 20 minutes	Approx. 40 minutes

*1 Including 30P, 24P, and 25P pull down of the DVCPRO HD

SD Mode

Image system	Recording method and Recording time
	DVCPRO 50
480-59.94i/576-50i*2	Approx.32 minutes

*2 Including 30P, 24P, and 25P pull down

◆Notes

- The values for 8 GB cards are 1/2 and the values for 4 GB cards are 1/4 those of 16 GB cards shown above.
- If the one-time continuous recording exceeds the duration which is given in the table below when a P2 card with a memory capacity of 8GB or more is used in AJ-HPX3000, the recording is automatically continued on a separate clip. When performing thumbnail operations (such as display, delete, repair or copy) for these kinds of clips using a P2 device, it is possible to perform the operations for the entire recording as a single clip. However, with nonlinear editing software or a personal computer, the recording may be displayed as separate clips.

Recording method (except for native)	Continuous recording time
DVCPRO HD	Approx. 5 minutes
AVC-Intra100	
AVC-Intra50	Approx. 10 minutes
DVCPRO50	

Approximate Proxy Recording Time (optional) on SD memory cards (Except for 24P native mode)

Card No. (Card Capacity)	MPEG4 recording rate		
	192 kbps	768 kbps	1500 kbps
RP-SDH256 (256 MB)	Approx. 2 hour 17 minutes	Approx. 35 minutes	Approx. 19 minutes
RP-SDH512 RP-SDK512 (512 MB)	Approx. 4 hour 27 minutes	Approx. 69 minutes	Approx. 38 minutes
RP-SDQ01G RP-SDK01G (1 GB)	Approx. 8 hour 56 minutes	Approx. 2 hour 19 minutes	Approx. 77 minutes
RP-SDQ02G RP-SDK02G (2 GB)	Approx. 18 hour 11 minutes	Approx. 4 hour 44 minutes	Approx. 2 hour 37 minutes
RP-SDV024G (SDHC 4 GB)	Approx. 35 hour 42 minutes	Approx. 9 hour 18 minutes	Approx. 5 hour 12 minutes

(Reference values when cards are used for continuous recording with our products. Actual recording time depends on the kind of scenes and the number of clips.)

The driver installed on the unit must be updated when using SD memory cards other than as listed above. To update the driver, refer to [Updating the firmware incorporated into the camera-recorder] (page 193)

For the latest information on P2 cards and SD memory cards not available in the operating Instructions, visit the P2 Support Desk at the following Web sites.

https://eww.pavc.panasonic.co.jp/pro-av/

Features of the Input/Output unit

■ Features USB2.0 port (HOST/DEVICE)

By connecting with a PC via USB2.0, a P2 card inserted in AJ-HPX3000 can be used as a bulk storage device.
It is also possible to store data on a P2 card onto a USB 2.0-connected external hard disk equipped with USB host capability as well as view clips stored on hard disks and write them to P2 cards. (Refer to page 135)

■ DVCPRO (IEEE1394) input/output provided as a standard configuration

Data can be input/output to an external device through the IEEE1394 digital interface. Use a 6-pin type connector. The unit does not support the bus power.
While operating AVC-Intra, it is impossible to input/output data with IEEE 1394. (Refer to page 133)

■ HD/SD SDI output featured as standard

Video can be output as HD SDI signals, down-converted SD SDI signals, or analog composite signals. SDI output includes embedded audio etc.. (Refer to page 44) Note that the SD mode does not output HD SDI signals.

■ Down converter output provided as a standard configuration

In HD mode, the MON OUT output connector and the VIDEO OUT connector (in setting VBS mode) output down converter (analog composite) signals.
It is optimum for confirming shot images on the SD monitor. (Refer to page 44)

■ HD/SD SDI input function (when the AJ-YA350AG is attached)

The camera-recorder with the AJ-YA350AG extension board attached can record SDI signals input through the SDI input connector only if the signals are in the same format as the camera-recorder.
(The unit does not support the various Native methods.)

■ Remote control connector

By connecting the remote control unit (AJ-RC10G), which is available as an optional accessory, the unit can be controlled remotely. (Refer to page 111)

■ Confirmation of return video signals

It is possible to confirm the return video signals (analog HD-Y signals in the HD mode/VBS or Y signals in the SD mode) supplied to the GENLOCK IN connector of AJ-HPX3000 in the viewfinder to confirm programs.
(Only video signals from the same record format can be confirmed.) (Refer to page 178)

■ DC OUT connector

The DC OUT connector of the unit produces 1.5 A of electrical current.
By connecting an external switch to this connector, it is possible to control REC start/stop.
Since a tally lamp can be used by connecting the LED to this connector, it is useful for shooting video when fixing the camera on a crane. (Refer to page 112)

Other features

■ Viewfinder connection

From the viewfinder connector of the unit, 1080-59.94i, 1080-50i, 480-59.94i or 576-50i signals are output.

Furthermore, signals are output for switching the frequencies of the connected viewfinder.

Confirm images in multi formats by connecting the viewfinder (AJ-HVF21G), which is available as an optional accessory. (Refer to page 28)

While the AJ-VF20WBP (59.94 Hz)/E (50 Hz) can also be connected, you cannot view video in formats with different frequencies.

■ User button

On the side panel of the unit, three user buttons (USER MAIN/USER1/USER2) are available.

Each button can be assigned the on/off function for any frequently used feature selected from among the many features of the unit, such as P2 card slot select (Refer to page 51).

Dimensions drawing

Unit: mm (inch)

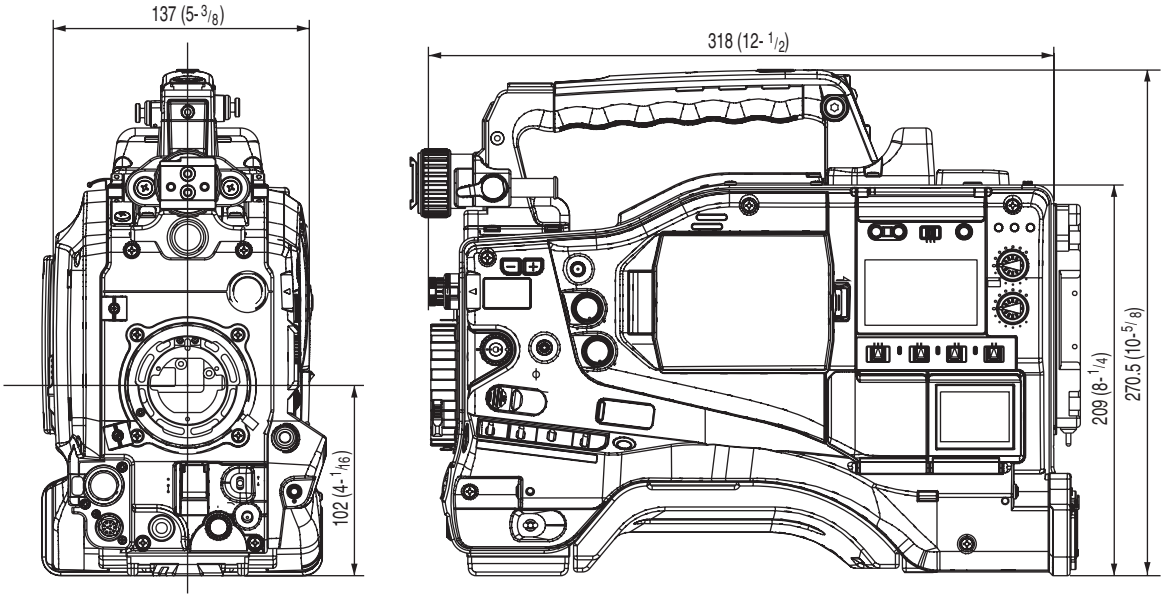

Color TV Standard Settings (Settings for frame frequency)

The unit is delivered with the color TV standard not yet specified. To revise the settings for frame frequency according to the preferred standard, refer to the procedures described below.

1 After connecting the unit to the power supply and then turning on the power, press the MENU SW button while pressing the LIGHT SW button to open OPTION MENU.

2 Turn the JOG dial button to move the cursor (arrow) to the AREA SELECT item on the AREA SETTING screen in OPTION MENU, and the press the JOG dial button.

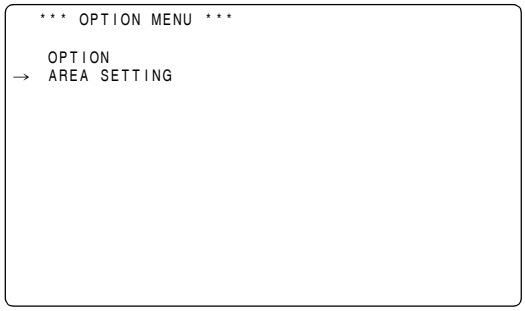

3 Select the area among NTSC, NTSC(J), and PAL. After selecting the area by turning the JOG dial button, press the JOG dial button.

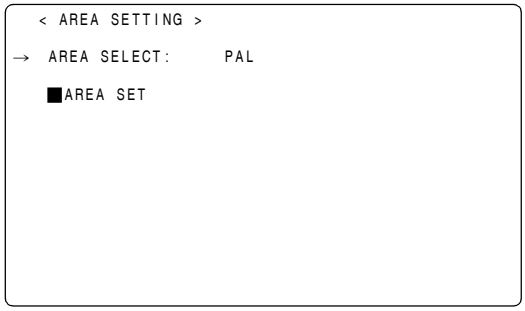

4 Move the cursor (arrow) to ■ AREA SET by turning the JOG dial button, and then press the JOG dial button. The following window appears.

5 Move the arrow (→) to YES and press the JOG dial button. The settings selected in Step 3 above are reflected in FACTORY and CURRENT DATA on the screen.

6 Turn off the power supply once and then turn on it again.

◆Notes

- The settings are not saved unless SET is executed even if NTSC, NTSC(J), or PAL is selected in the AREA SELECT.
- When AREA SELECT is revised, the "■ AREA SET" blinks.
- When these items are set when the unit is used for the first time, only the following 8 items are revised. When the other settings of the unit are set in MAIN MENU, the MENU setting values for items other than the following 8 are ones that were set at the factory.

	Factory settings	NTSC	NTSC(J)	PAL
SYSTEM MODE	1080-59.94i	1080-59.94i	1080-59.94i	1080-50i
CAMERA MODE	60i	60i	60i	50i
SET UP*1	7.5%	7.5%	0%	0%
D/C SET UP*2	7.5%	7.5%	0%	0%
REAR LINE IN LVL	+4dB	+4dB	+4dB	0dB
AUDIO OUT LVL	+4dB	+4dB	+4dB	0dB
HEAD ROOM	20dB	20dB	20dB	18dB
GUI metadata language indication	American English	American English	Japanese/ For Japan	American English
LANGUAGE	Not displayed	Not displayed	ENDLISH JAPANESE	Not displayed
DATA FORMAT*3	MDY	MDY	YMD	DMY

*1 SET UP of the DOWN CON SETTING menu (Enabled only for 1080-59.94i)

*2 SET UP of the SYSTEM MODE menu (Enabled only for 480-59.94i)

*3 Select THUMBNAIL → SETUP → DATA FORMAT from the thumbnail menu. For details refer to [Setting the Thumbnail Display Mode] (page 128).

System Configuration

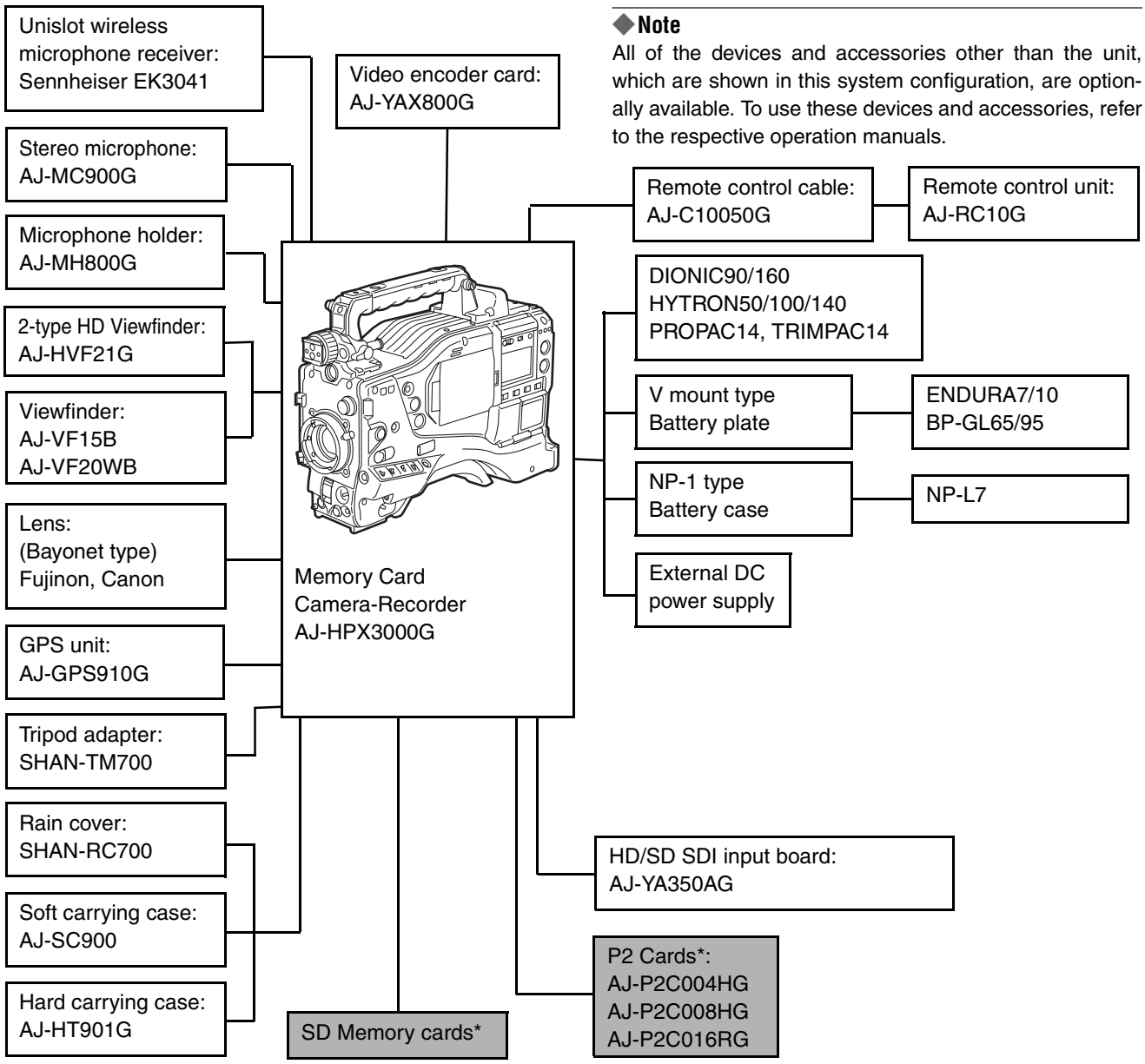

◆Note

All of the devices and accessories other than the unit, which are shown in this system configuration, are optionally available. To use these devices and accessories, refer to the respective operation manuals.

* For the latest information on P2 cards and SD memory cards not available in the operating Instructions, visit the P2 Support Desk at the following Web sites.
https://eww.pavc.panasonic.co.jp/pro-av/

Parts and their Functions

Power Supply and Accessory Mounting Section

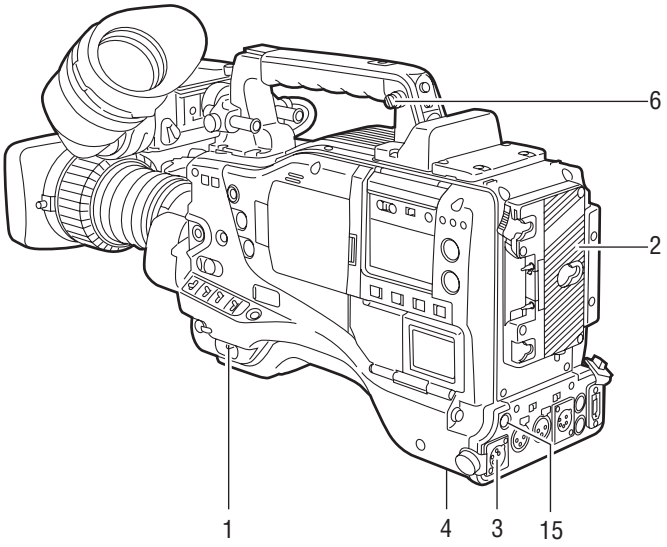

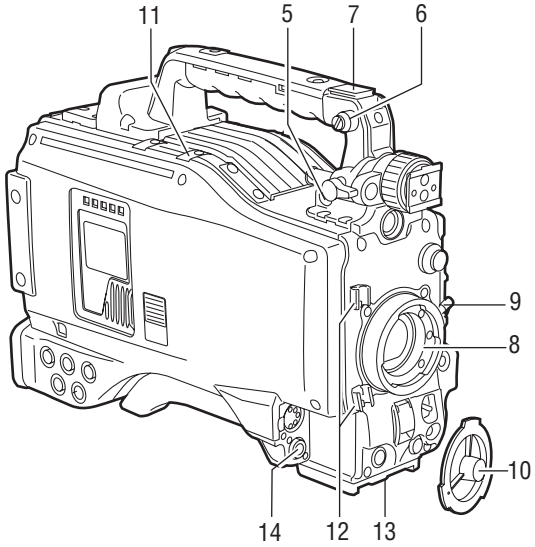

1. **POWER switch**
   Used to turn on/off the power.

2. **Battery mount**
   A battery pack from Anton/Bauer is mounted here.

3. **DC IN (external power input) socket (XLR, 4P)**
   camera-recorder is connected to an external DC power supply.

4. **BREAKER switch**
   When an excessive amount of current is fed through the camera-recorder, due to any abnormal event, the breaker automatically turns off the power in order to protect the device.
   After the interior of the camera-recorder has been checked and/or repaired, this button must be depressed. If there is no unusual reaction, the unit can be powered-up.

5. **GPS connector**
   This connects the optional GPS unit AJ-GPS910G.

6. **Shoulder strap fittings**
   The shoulder strap is attached here.

7. **Light shoe**
   A video light or similar accessory can be attached here.

8. **Lens mount (bayonet 2/3-type)**
   The lens is attached here.

9. **Lens lever**
   Lower this lever to lock the lens to the lens mount.

10. **Lens mount cap**
    To remove the cap, raise the 9. lens lever.
    When the lens is not mounted, replace the cap.

11. **Light cable clamp**
    Secures the light cable.

12. **Lens cable/microphone cable clamp**
    This clamp secures the lens and microphone cables.

13. **Tripod mount**
    When you want to mount camera-recorder on a tripod, the optional tripod adapter (SHAN-TM700) is attached here.

14. **LENS jack (12-pin)**
    The lens connection cord is connected here. For a detailed description of your lens, see the relevant manufacturer's instruction manual.

15. **DC OUT (DC power supply) output socket**
    This output socket is designed for 12-VDC. It provides a maximum current of 1.5 A.
    Connect an external switch to this socket to control REC starts and stops or an LED for use as a tally lamp. For more information, see [Connection of the external switch] (page 112).

Audio (input) Function Section

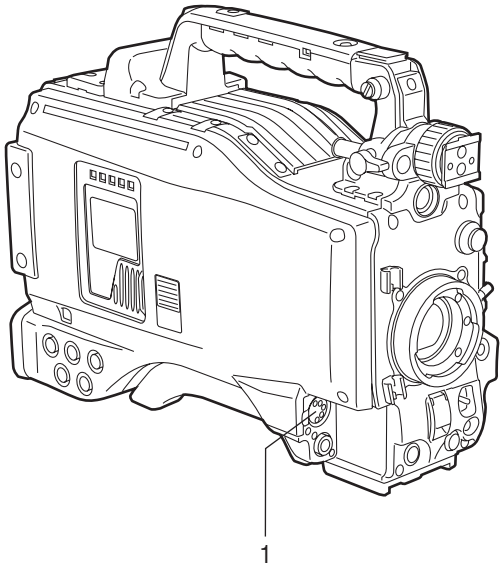

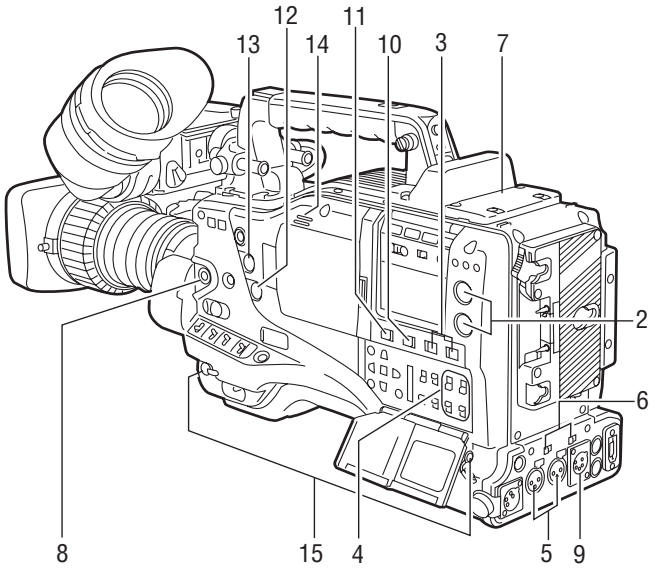

1. MIC IN (microphone input) jack (XLR, 5-pin)

A microphone (optional accessory) is connected here. Power for the microphone comes from this jack.

A remote microphone may be connected. When a microphone is used, set the power to ON through the menu option FRONT MIC POWER.

These options are found in the <MIC/AUDIO2> screen on the MAIN OPERATION page.

2. AUDIO LEVEL CH1/CH2 (audio channel 1 & 2 recording level adjustment) controls

With the 3. AUDIO SELECT CH1/CH2 switch positioned to [MAN], these controls can be used to adjust the recording levels for Audio Channels 1/2.

Note that the controls are designed to be locked. For adjustment, each control must be depressed while turning.

3. AUDIO SELECT CH1/CH2 (audio channel 1 & 2 automatic/manual level adjustment selector) switch

Use this switch to select recording level control mode for Audio Channels 1 and 2.

AUTO: Recording level automatically controlled.
MAN: Recording level manually controlled.

4. AUDIO IN (audio input selector) switch

Use this switch to select the signals recorded through Audio Channels 1 - 4.

FRONT: Signal from the microphone connected to the 1. MIC IN jack is recorded.
W.L. (WIRELESS) : Signal from the slot-in wireless receiver is recorded.
REAR: Signal from the audio device connected to the 5. AUDIO IN CH1/CH2 connector is recorded.

◆Note

When you use stereo microphone (AJ-MC900G optional), set both CH1 and CH2 to [FRONT]. The signal from L CH is recorded to CH1 and that from R CH to CH2.

5. AUDIO IN CH1/CH2 (audio input channel 1 & 2) connectors (XLR, 3-pin)

Audio devices or a microphone may be connected here.

6. LINE/MIC/+48V (line input/mic input/mic input + 48V) selector switch

Used to select the audio signal input from the 5. AUDIO IN CH1/CH2 connectors.

LINE: Audio signal line-input from the audio device is input.
MIC: Audio signal from a self-powered (active) microphone is input. (The main unit does not supply power to the remote microphone).
+ 48V: Audio signal from a passive microphone is input. (The unit supplies power to the remote microphone).

7. Wireless slot

A Unislot wireless receiver (optional accessory) may be attached here.

8. FRONT AUDIO LEVEL (audio recording level adjustment) control

This control adjusts the recording levels for Audio Channels 1 and 2.

However, when the 3. AUDIO SELECT CH1/CH2 switch is set to “AUTO”, the level will adjust automatically and the 2. AUDIO LEVEL CH1/CH2 knob and this knob will not be active.

The control can be enabled or disabled through the menu options FRONT VR CH1 or FRONT VR CH2. These options can be found in the <MIC/AUDIO1> screen on the MAIN OPERATION page.

Audio (output) Function Section

9. AUDIO OUT connector (XLR, 5-pin)

This connector outputs audio signals recorded on Channels 1/2 or 3/4.
Output signals are selected with the MONITOR SELECT CH1/2 / CH3/4 selector switch.

10. MONITOR SELECT (audio channel) CH1/2 / CH3/4 selector switch

Use this switch to select the audio channel whose signals are output to the speakers, earphones or AUDIO OUT connector.

CH1/2: Signals on Audio Channels 1 and 2 are output.
CH3/4: Signals on Audio Channels 3 and 4 are output.

The channel indications on the display window and on the audio level meter in the viewfinder are synchronised with this selector switch.

11. MONITOR SELECT (audio selection) CH1/3 / ST / CH2/4 selector switch

The MONITOR SELECT switch is synchronised with the audio signal output to the speakers and earphones, and from the AUDIO OUT connector.

CH1/3: Signal on Audio Channel 1 or 3 is output.
ST: Stereo audio signals on Audio Channels 1 and 2 or Audio Channels 3 or 4 are output. The stereo signals can be changed to mixed signals using a menu option.
CH2/4: Signal on Audio Channel 2 or 4 is output.

Monitor switch	MONITOR SELECT switch	
	CH1/2	CH3/4
CH1/3	Audio Channel 1	Audio Channel 3
ST	Stereo signals from Audio Channels 1 and 2*	Stereo signals from Audio Channels 3 and 4*
CH2/4	Audio Channel 2	Audio Channel 4

*** You can select between stereo and mixed signal types using the menu option MONITOR SELECT. This menu option can be found in the <MIC/ AUDIO2> screen on the MAIN OPERATION page.**

12. MONITOR (volume) control

Used to control the volume of sound output from the monitor speakers and earphones.

13. ALARM (warning alarm volume adjustment)

Used to control the volume of the warning sound emitted from 14. speakers or earphones connected to the 15. PHONES jack.
If the control is minimised, no alarm is audible.

14. Speakers

The speakers output EE sound during recording, and reproduced sound during playback.
The speakers emit an alarm sound when the warning lamp blinks and/or the indicator activates.
When the 15. PHONES jack is connected with earphones, sound from the speaker is automatically muted.

15. PHONES (earphones) jack (mini jack)

This connector is designed for audio monitoring (stereo) earphones. When earphones are connected, sound from the speakers is automatically muted.
Both the front and rear connectors output the same sound.

Shooting and Recording/Playback Functions Section

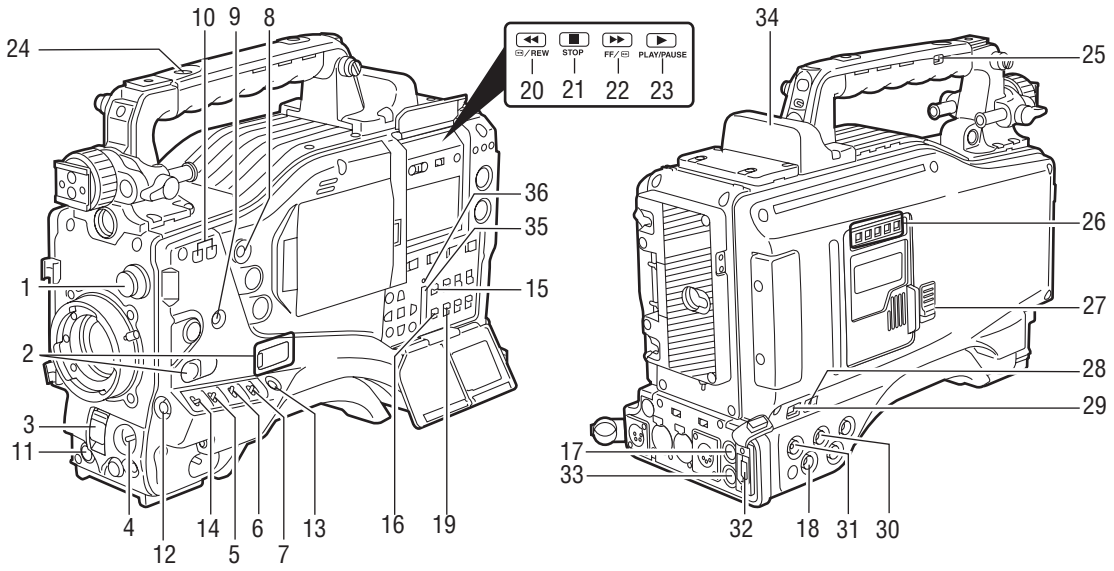

1. CC FILTER/ND FILTER (filter switching) controls

These are used to select the filter in accordance with the subject's brightness and color temperature.

CC FILTER knob (outside, large diameter)

A : 3200K B : 4300K
C : 5600K D : 6300K

ND FILTER knob (inside, small diameter)

1 : CLEAR (transparent) 2 : 1/4 ND
3 : 1/16 ND 4 : 1/64 ND

Shooting conditions	CC FILTER	ND FILTER
Sunrise, sunset, inside a studio	A (3200 K)	1 (CLEAR)
Outdoors under a clear sky	B (4300 K) or C (5600 K) or D (6300 K)	2 (1/4 ND) or 3 (1/16 ND)
Outdoors under cloudy or rainy skies	D (6300 K)	1 (CLEAR) or 2 (1/4 ND)
Snowscapes, high mountains, seashores or other perfectly clear scenery	B (4300 K) or C (5600 K) or D (6300 K)	3 (1/16 ND) or 4 (1/64 ND)

2. USER MAIN, USER 1 and USER 2 buttons

These buttons can be assigned user-selected functions, using a menu option. Each button, when pressed, performs the assigned function.

For more information, see [Assigning Functions to USER MAIN, USER1 and USER2 Buttons] (page 51).

3. SHUTTER switch

Used to enable or disable the electronic shutter.

OFF: Electronic shutter disabled.
ON: Electronic shutter enabled.
SEL: Used to change the speed of the electronic shutter.

This dial switch returns to its original position. Each turn of the switch alters the shutter speed.

For more information, see [Setting the Electronic Shutter] (page 49).

4. AUTO W/B (white/black) BAL switch

AWB: White balance is automatically adjusted.
When the WHITE BAL switch on the side is positioned at [A] or [B], the adjusted value is stored in the memory.
Note that when the switch is positioned at [PRST] this function does not work.

ABB: Back balance is automatically adjusted.
The automatic adjustment function of the black shading can be assigned to this switch by turning on the SHD.ABB SW CTL item on the <SW MODE> page through menu operation. (Refer to page 178)

◆Note

To stop automatic adjustment of the white or black balance in progress, set the switch to either ([AWB] or [ABB]).

If automatic adjustment is cancelled, the value in effect before automatic adjustment will be used.

5. Gain selector switch

Use this switch to select video amplifier gain, according to lighting conditions under which you are shooting.

The values for L, M, and H can be preset using menu options.

These are factory-set to 0 dB for L, 6 dB for M, and 12 dB for H.

6. OUTPUT/AUTO KNEE selector switch

Used to select the video signals sent from the camera unit to the memory, viewfinder and video monitor.

CAM. AUTO KNEE ON:

Video being recorded through the camera is sent with the auto knee circuit activated.

It is also possible to assign the DRS (Dynamic Range Stretcher) function instead of the AUTO KNEE function.

CAM. AUTO KNEE OFF:

Video being recorded through the camera is sent in manual knee mode.

BARS:

Color bar signal is output. The AUTO KNEE circuit does not work.

You can select between four types of color bar signal. For more information, see [SW MODE] (page 178).

Auto Knee function

Usually, when you adjust levels to shoot people or scenery against a strongly lit background, the background will be totally whited-out, with buildings and other objects blurred. In this case, the AUTO KNEE function reproduces the background clearly. This function is effective when:

- The subject is a person positioned in the shade under a clear sky.
- The subject is a person inside a car or building, and you also want to capture the background visible through a window.
- The subject is a high-contrast scene.

7. WHITE BAL (white balance memory selector) switch

Used to select the white balance adjustment method.

PRST: Use this when you have no time to adjust the white balance.

The value for the white balance is factory-set to 3200 K.

It can be changed to any color temperature using a menu option. For more information, see [Setting Color Temperature Manually] (page 47).

A or B: Pressing the 4. AUTO W/B BAL Switch toward [AWB] automatically adjusts the white balance, saving the adjusted value in Memory A or B. For more information, see [Adjusting the White Balance] (page 45).

8. MODE CHECK button

Each press of this button changes the screen type in the viewfinder in the following order: STATUS, !LED, FUNCTION, AUDIO, CAC.

This does not affect the signal output from the camera.

9. MARKER SELECT button

This button selects the marker information indicated on the viewfinder screen. It switches between two marker information indications, which can be selected using a menu option. Pressing this button once switches the indicated marker information from A (Marker A) to B (Marker B), and pressing again switches B to OFF (no marker). When the power is turned on, the last selected indication before power-down appears.

For more information, see [Marker Check Screen Displays (MARKER SELECT button function)] (page 78).

10. SYNCHRO SCAN ADJUSTMENT buttons

These buttons are enabled when the 3. shutter switch is positioned at [ON] and synchro scan is selected.

They are used to adjust the speed of the synchro scan.

The – button decreases shutter speed; the + button increases shutter speed.

If you shoot a PC monitor, for example, you should adjust shutter speed so that the horizontal bars in the viewfinder will produce less noise.

11. REC START/STOP button

Pressing this button starts recording, pressing again stops recording.

This button has the same function as the 24. REC button on the handle and the VTR button at the lens.

12. SHOT MARK/Menu cancel button

Pressing this button while recording adds a shot mark to the thumbnail of that clip. This button also adds a shot mark to any thumbnail selected on the LCD monitor.

For more information on shot marks, see [Shot Mark Function] (page 42).

This button cancels the revised set value when the menu is displayed.

13. Text memo button

Records a text memo if pressed during recording or playback or when playback is paused.

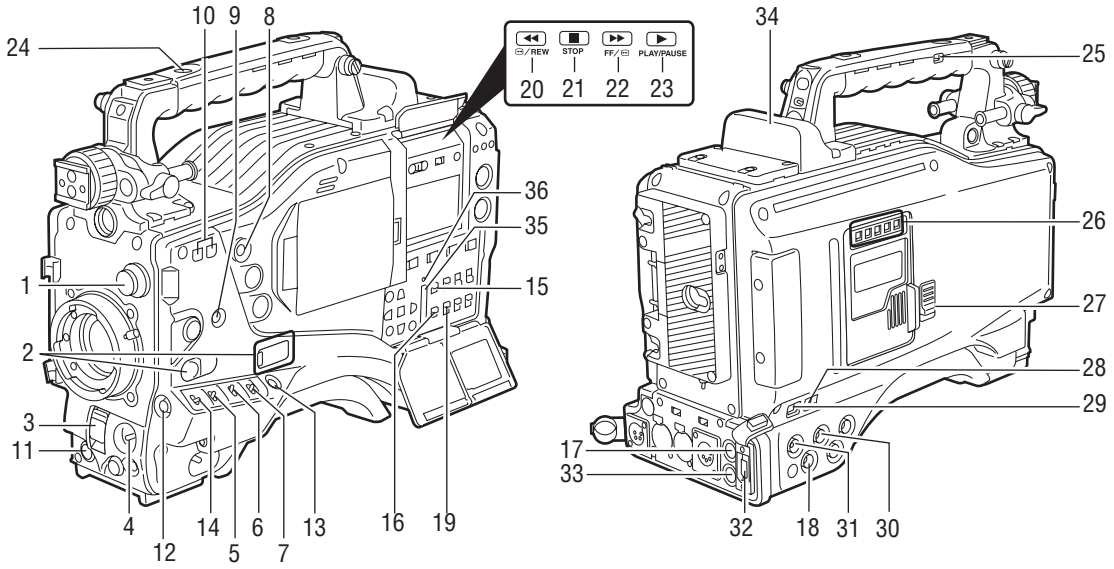

14. SAVE ON/OFF switch

Used to select the power supply method for each output section.

ON: The output selected through the menu option SAVE SW is power-saved. This option can be found on the OPTION MODE screen on the SYSTEM SETTING page.

OFF: Power saving is canceled.

◆**Note**

The ON/OFF switch does not function during recording. The ON/OFF status changes after recording is completed.

15. VIDEO OUT (output signal selector) switch

Changes the mode of the signals output through the VIDEO OUT connector.

HD SDI : HD SDI signals are output. When the camera-recorder is in SD mode, SD SDI signals are output.

SD SDI : SD SDI signals are output.

VBS : Composite video signals are output.

16. VIDEO OUT CHARACTER switch

This switch controls the superimposition of characters onto the video output from the VIDEO OUT connector.

ON: Characters are superimposed.

OFF: Characters are not superimposed.

For types of characters, see [Settings of signals output from VIDEO OUT connector] (page 80).

17. VIDEO OUT (video signal output) connector

This connector outputs video signals. The video signals linked to the settings of 15. VIDEO OUT switch, 16. VIDEO OUT CHARACTOR switch and 19.OUTPUT SEL switch are output from here. For more details, refer to [Settings of signals output from VIDEO OUT connector] (page 80).

18. MON OUT (monitor output) connector

Used to output down-converted (analog composite) signals for the monitor. The video signals linked to the setting of the OUTPUT SEL switch are output from here. Through an internal menu option, the characters can be superimposed independently of the VIDEO OUT connector. For more information, see [Settings of signals output from MON OUT connector] (page 81).

19. OUTPUT SEL (output signal selection) switch

Used to switch the signals output from the VIDEO OUT and MON OUT connectors.

MEM: Video from the camera is output during recording or when recording is paused or playback signals are output from the P2 card during playback.

CAM: Video from the camera is output constantly.

OFF: Video is not output, and the camera-recorder operates in power-saving mode.

Note that the audio output is synchronised with the video.

For types of video outputs, see [Settings of signals output from VIDEO OUT connector] (page 80) or [Settings of signals output from MON OUT connector] (page 81).

◆**Notes**

- During recording, this switch does not switch output signals before stopping the recording operation.
- When CAM is not selected through the REC SIGNAL menu option, the output signals are the same as for MEM even if the switch is set to CAM. The menu option REC SIGNAL is found in the SYSTEM MODE screen on the SYSTEM SETTING page.

20. REW (rewind) button and lamp

During pause, this button performs a fast-reverse playback with the lamp blinking.

During playback, it performs an approximately 4× fast-reverse playback with the PLAY and REW lamps blinking.

If this button is pressed when playback is paused, the start of the clip being played back is located in pause mode.

21. STOP button

This button stops playback.

22. FF (fast forward) button and lamp

During pause, this button is used to perform fast playback with the lamp blinking.

During playback, it performs an approximately 4× fast playback with the PLAY and FF lamps blinking.

If this button is pressed when playback is paused, the start of the next clip is located in pause mode.

23. PLAY/PAUSE button

This button is used to view playback using the viewfinder screen or a color video monitor. The lamp comes on when playback starts.

In playback mode, this button pauses (PLAY PAUSE) playback with the lamp blinking.

24. REC button

Pressing this button starts recording, and pressing again stops recording.

This button has the same function as 11. the REC START/STOP button and the VTR button at the lens.

It may be disabled with 25. the REC protection button.

25. REC protection button

This button disables 24. the REC button on the handle.

ON: The REC button is enabled.

OFF: The REC button is disabled.

26. P2 CARD ACCESS LED

This LED indicates the recording and playback status of each card.

27. Slide lock button

Used to open the slide-out door for inserting P2 cards. While depressing this button, slide the door to the left.

28. USB 2.0 connector (DEVICE)

29. USB 2.0 connector (HOST)

A USB 2.0 cable is connected here.

When the menu option PC MODE is set to “ON”, data can be transferred via USB 2.0. During such data transfer, recording, playback or operations of clips is permitted.

The menu option PC MODE is found in the SYSTEM MODE screen on the SYSTEM SETTING page. For more information, see [Connection with external devices using the USB 2.0 port] (page 135).

30. GENLOCK IN connector

Used to input an HD Y signal when GENLOCKing the camera or externally locking the time code. Alternatively, a composite signal can be input as the reference signal. Note that the subcarriers for the down-converter (composite signal) output from the camera-recorder cannot be externally locked.

◆**Notes**

- When HD Y signal is input and CAM RET is selected, you can check return video on the viewfinder screen. The menu option RET SW can be found in the SW MODE screen on the CAM OPERATION page.
- When the mode is set to SD, you can record original signals by specifying VIDEO for the menu option REC SIGNAL.

31. SDI OUT/IN (option) connector

The default setting outputs the same SDI signals as the SDI signals from the VIDEO OUT connector. When the VIDEO OUT switch is set to VBS, HD SDI signals are output in the HD mode while SD SDI signals are output in the SD mode.

If installed, the optionally available HD/SD SDI input board (AJ-YA350AG, optional accessory) acts as an input connector for HD/SD SDI signals. You can record signals from this input connector by specifying SDI for the menu option REC SIGNAL. For details, refer to [Connection using the SDI IN connector (when AJ-YA350AG attached)] (page 141).

32. DVCPRO connector

This is an in/output connector for video, voice, and data that comply with the IEEE1394 standard. It is impossible to input/output the DV signal.

◆Notes

- Power is not supplied from the unit.
- Be absolutely sure to bear the following points in mind when connecting the IEEE1394 cable (DV cable).
  - ◆Ensure that the connections with other devices are made on a 1:1 basis.
  - ◆When an IEEE1394 cable has been connected to the DVCPRO connector, do not apply any strong external force as this may damage the connector.
  - ◆When error code 1394 E-92 (1394 INITIAL ERROR) appears, disconnect the connecting cables and re-connect them or turn off the camera-recorder's power and turn it back on.
  - ◆Ensure that the unit and all of the connected devices are each grounded (or connected to a common ground) before use.
    If it is not possible to ground the unit and devices, turn off the power of the unit and of all the connected devices before connecting or disconnecting the IEEE1394 cable.
  - ◆When the unit is to be connected to a device equipped with a 4-pin type of connector, connect the unit's connector (6-pin type) first.
  - ◆When connecting the unit with a PC equipped with a 6-pin type ofconnector, connect the IEEE1394 cable as dictated by the shapes of the 1394 connectors. Bear in mind that inserting a plug the wrong way round may damage the unit.

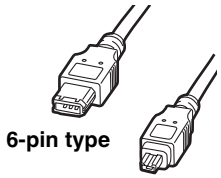

  - ◆ When the unit is used in AVC-Intra format, image/voice signals cannot be output/input through the DVCPRO connector.

33. REMOTE (remote control) connector

The remote control unit AJ-RC10G (optional accessory) is connected here.

◆Note

For software of the AJ-RC10G, use Version 1.10-00-000 or higher.

34. OPTION SLOT

Attach the video encoder card (AJ-YAX800G, optional). For information about the installation and proxy recording, see the AJ-YAX800G instruction manual.

35. SD memory card insertion slot

An SD memory card (optional accessory) is inserted here. SD memory cards are used for uploading meta-data, and proxy recording (optional).

<Cautions in using SD memory cards>

Use the unit by inserting an SD memory card that is compliant with the SD standard or the SDHC standard.
MultiMediaCards cannot be used. (Bear in mind that taking pictures may no longer be possible if you do use them.)
If you intend to use miniSD cards in camera-recorder, always install the adapter specially designed for miniSD cards. (The unit will not work properly if only the miniSD card adapter is installed. Make sure that the card has been installed in the adapter before using it.)
Use of Panasonic's SD memory cards and miniSD cards is recommended. Be sure to format cards using camera-recorder.
To format SD memory cards using a personal computer, download the dedicated software from the support site.
Any SD memory card with the following capacities (8 MB to 2 GB) and any 4 GB SDHC memory card can be used with the unit.

8 MB	**16 MB**	**32 MB**	**64 MB**
128 MB	**256 MB**	**512 MB**	**1 GB**
2 GB	**4 GB (SDHC)**		

To record proxy (optional), use an SD memory card with a capacity of 256 MB, 512 MB, 1 GB, or 2 GB labeled "High Speed" or use a 4 GB SDHC memory card.
For the latest information not available in the operating Instructions, visit the P2 Support Desk at the following Web sites.

https://eww.pavc.panasonic.co.jp/pro-av/

- The SDHC card conforms to a new standard for memory cards with a large capacity of more than 2 GB which was established by the SD Association in 2006.
- The SD card logo is a registered trademark.
- MMC (MultiMediaCard) is a registered trademark of Infineon Technologies AG.

36. BUSY (operation mode display) lamp

This lamp indicates the active status of the SD memory card.
It stays illuminated when the card is active.

◆Note

While the lamp is on, do not insert or remove the card.

Menu Operation Section

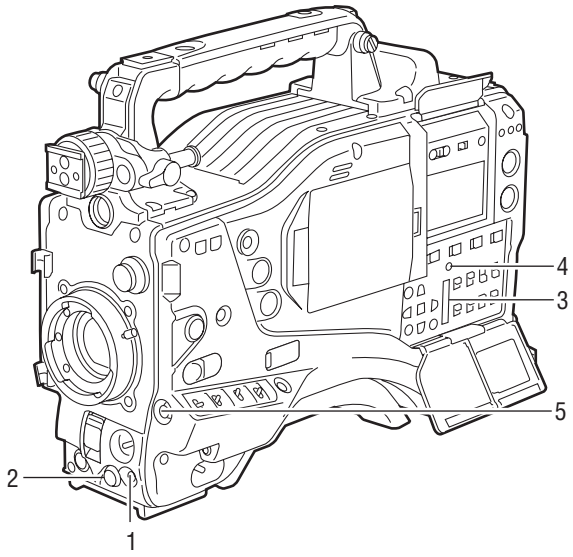

1. MENU button
Used to turn on/off the menu.

2. JOG dial button
With the menu open, this button is used to navigate through menu pages, select options and specify values.
For directions on manipulating the menu, see [Setting Menu Options] (page 157).

3. SD memory card insertion slot
An SD memory card (optional accessory) is inserted here. It is used when writing or saving menu data or lens files on an SD memory card.

4. BUSY (operation mode display) lamp
This lamp indicates the active status of the SD memory card.
It stays illuminated when the card is active.

◆Note
While the lamp is on, do not insert or remove the card.

5. Shot Mark/Cancel Menu button
Undoes any changes to the menu option settings if pressed during the changes

Time Code Section

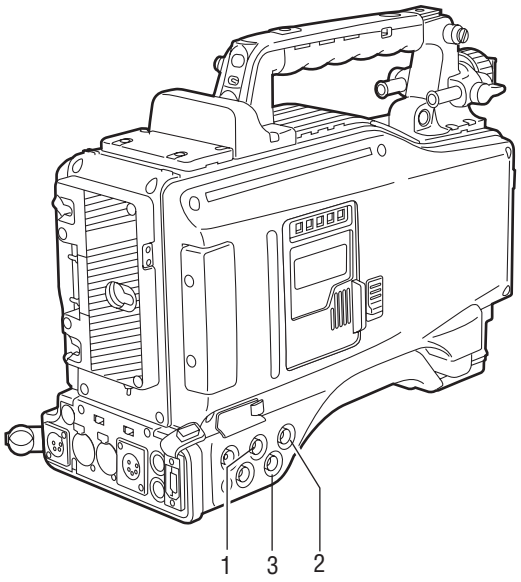

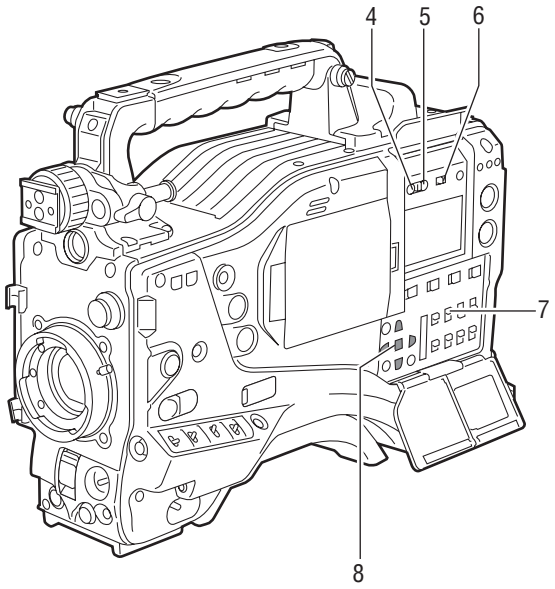

1. GENLOCK IN connector (BNC)

This connector is used to input a reference signal before the camera unit is gen-locked, or before the time code is externally locked.

2. TC IN connector (BNC)

This connector is used to input a reference time code when you externally lock the time code.

3. TC OUT connector (BNC)

When you inter-lock the time code of camera-recorder with that of an external device this must be connected with the time code input (TC IN) connector of the external device.

◆Note

The time code must be input in the same format as the system mode of the camera-recorder.

4. HOLD button

Pressing this button freezes the time data indication on the counter. Note that time code generation continues. Pressing the button again reactivates the counter.

This function is used to ascertain the time code or CTL count of a particular recorded scene.

5. RESET button

This button resets the time data (CTL) on the counter to “00:00:00:00”.

If this button is pressed when with the 7.TCG switch positioned at [SET], time code and user bits data are reset to 0, and real-time data is reset to the initial value.

6. DISPLAY (counter display selector) switch

Indications of the time code, CTL and user bits on the counter of the display window depend on the positions of this switch and the 7.TCG switch.

Pressing the 4.HOLD button also displays Date/Time/Time Zone.

UB: User bits/DATE/TIME/Time zone indicated.
TC: Time code indicated.
CTL: CTL indicated.

7. TCG (time code selector) switch

This switch is used to specify the stepping mode for the built-in time code generator.

F-RUN: Select this position to continuously advance the time code independently of the P2 card recording status.
Use this mode to synchronise the time code with the time of day, or to externally lock the time code.

SET: Select this position to set the time code and/or user bits.

R-RUN: Select this position to advance the time code only during recording.
For spliced scenes recorded on P2 cards, the sequence of time codes is unbroken.

8. CURSOR and SET buttons

Use these buttons to set the time code and user bits.
The four triangular buttons are the CURSOR buttons, and the center rectangular one is the SET button.
For guidance in setting the time code and user bits, see [Setting Time Data] (page 55).

Warning and Status Display Functions

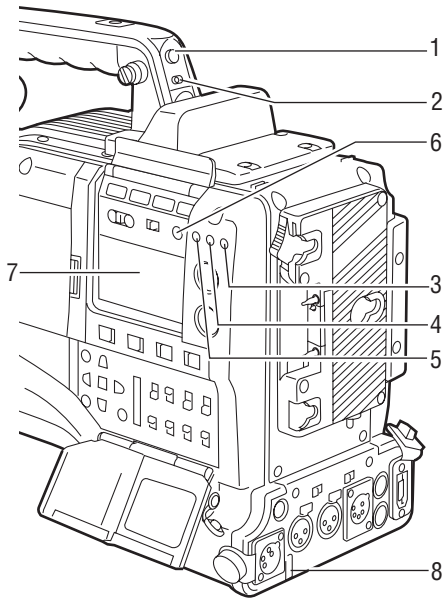

1. Back tally lamp
When the 2.BACK TALLY switch is set to [ON], the lamp behaves in the same way as the front tally lamp at the viewfinder.

2. BACK TALLY switch
This switch controls the action of the 1.back and 8.rear tally lamps.

ON: Back and rear tally lamps enabled.
OFF: Back and rear tally lamps disabled.

3. WARNING lamp
This lamp starts blinking or lights up if something unusual occurs in the memory.

4. USB lamp
Stays on when the camera-recorder is in USB mode.

5. Access lamp
Blinks when the camera-recorder is in recording or playback mode or when a P2 card is being accessed, or stays on when a recordable P2 card is inserted.

6. LIGHT button
Use this button to control illumination of the display window.
Alternately pressing this button toggles illumination of the 7.display window on or off.

7. Display window
This window displays warnings, battery-remaining level, sound volume, time data, and other information.

◆Note
When the battery is installed, the camera-recorder indicates the data even if the power is turned off. To turn off the data indications to keep the battery from being discharged, specify OFF for the menu option P. OFF LCD DISPLAY found in the TC/UB screen on the MAIN OPERATION page.

8. Rear tally lamp
When the 2.BACK TALLY switch is set on [ON], the rear tally lamp behaves in the same way as the back tally lamp.

Display Window Functions

P2 card/battery-remaining level indications

Media-remaining space indication bar
The bar indicates the remaining free space on each P2 card, using a seven-segment display.
Each segment can represent either three or five minutes of remaining free space, depending on the value set through the menu option CARD REMAIN/■. According to the set value, the segments disappear one-by-one. The menu option CARD REMAIN /■ can be found in the <BATTERY/P2CARD> screen on the MAIN OPERATION page.

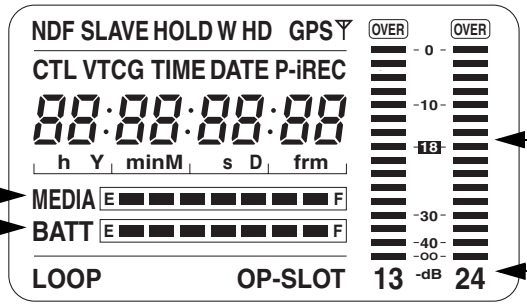

Battery-remaining level indication bar
For a battery with a digital indicator (percentage indication), if the remaining level of the battery is higher than 70%, all seven segments up to the “F” position are lit. When the remaining level falls below 70%, the segments go out one-by-one for each drop of 10%. All seven segments can be set to light up when the battery-remaining balance is 100%. To do so select “100%” for the menu option BATT REMAIN FULL in the <BATTERY/P2CARD> screen of the MAIN OPERATION page.

Audio channel level meter
When the MONITOR SELECT CH1/2 / CH3/4 switch is set to [CH1/2], the meter indicates 1 and 2 as the audio channel numbers, together with their audio levels. When the switch is set to [CH3/4], the meter indicates 3 and 4 as the audio channel numbers, together with their audio levels.

Memory action status indication

Error Code Indication (for more information, see [Warning System] (page 149))

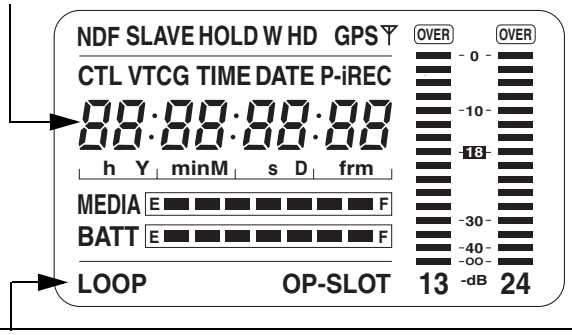

Information indication
LOOP: Stays illuminated in LOOP REC mode. For information about the LOOP REC mode, see [Loop Recording] (page 37).
OP-SLOT: Remains illuminated when a video encoder card is operated in the optional slot.

Mode indication
W: Stays illuminated when the camera-recorder operates in SD mode (480-59.94i, 576-50i) and is set to 16:9 mode.
HD: Stays illuminated when the camera-recorder is in HD mode (1080i).
GPS: Stays illuminated when radio waves are not received during GPS operation.
GPS: Stays illuminated when radio waves are received during GPS operation.
P-REC: Stays illuminated when the PRE REC MODE is set to ON, and blinks when recording is continued after the recording tally lamp has gone out.
iREC: Remains illuminated during INTERVAL REC mode recording, and blinks during a pause.
i: Blinks when INTERVAL REC mode is selected.

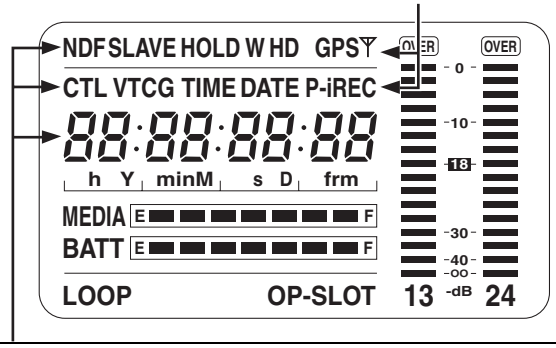

Time code indication
NDF: Stays illuminated when the time code is in non-drop frame mode.
DF: Stays illuminated when the time code is in drop frame mode.
SLAVE: Stays illuminated when the time code is externally locked.
HOLD: Stays illuminated when the time code generator/reader value is frozen.
CTL: Stays illuminated when the DISPLAY switch is positioned at [CTL] to display the CTL count.
TCG: Stays illuminated when the DISPLAY switch is positioned at [TC] (or [UB]) to display the TC (or UB) generator value.
TC: Stays illuminated when the DISPLAY switch is positioned at [TC] (or [UB]) to display the TC (or UB) reader value.
VTCG: Stays illuminated when the DISPLAY switch is positioned at [UB] to display the VIUB generator value.
VTC: Stays illuminated when the DISPLAY switch is positioned at [UB] to display the VIUB reader value.
TIME: Stays illuminated when the DISPLAY switch is positioned at [UB] to display the real-time hour, minute and second.
DATE: Stays illuminated when the DISPLAY switch is positioned at [UB] to display the real-time date.
No Indication:
The CTL, VTCG, TIME, and DATE stay off when the DISPLAY switch is positioned at [UB] to display real time, time zone, hour and minute.
Time count indication:
The time code, CTL, user bits and real time are shown.

◆**Note**
When the DISPLAY switch is positioned at UB, each press of the HOLD button changes the indication through VTCG (VTC) → DATE → TIME → No Indication (Time Zone) → TCG (TC), in that order.

LCD Monitor

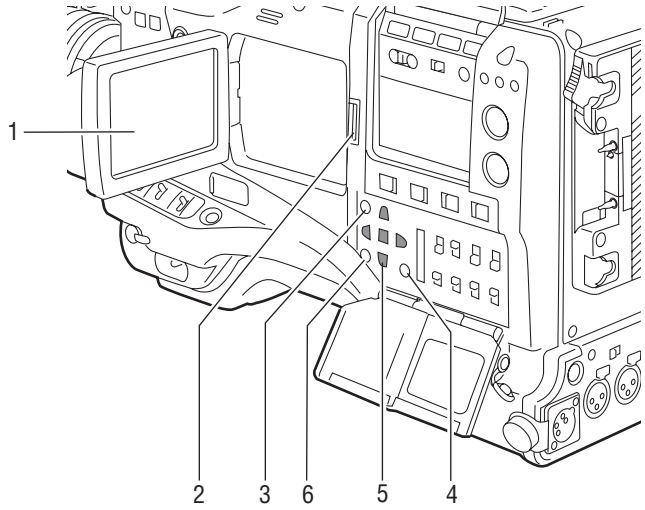

1. LCD monitor

The LCD monitor displays the video in the viewfinder. Alternatively, it can show clips on the P2 card in a thumbnail format.

In thumbnail display mode, clips can be edited or deleted, or P2 cards can be formatted using the 4.THUMBNAIL MENU button and 5.CURSOR and SET buttons.

2. OPEN button

Used to open the LCD monitor.

3. THUMBNAIL button

This button switches the content on the 1.LCD monitor from the video in the viewfinder to clip thumbnails. Another press switches them back to the video from the viewfinder.

Note that this switchover is not performed during a recording or playback.

4. THUMBNAIL MENU button

In thumbnail display mode, this button allows you to manipulate the thumbnail menu (e.g., to delete clips).

5. CURSOR and SET buttons

The four triangular buttons are the CURSOR buttons, and the center rectangular one is the SET button.

They are used to select a thumbnail and manipulate the thumbnail menu. For more information, see [Manipulating Clips with Thumbnails] (page 113).

6. EXIT button

Used to return the display to the previous state when the thumbnail menu or the property screen is displayed.

Viewfinder

You can use any of the following viewfinders (extra-cost options) on AJ-HPX3000:

HD Viewfinders: AJ-HVF21G (selectable between 59.94 and 50 Hz)
SD Viewfinders: AJ-VF20WBP (59.94 Hz), AJ-VF15BP (59.94 Hz), AJ-VF20WBE (50 Hz), and AJ-VF15BE (50 Hz)

Use the VF TYPE menu options on the SYSTEM MODE screen on the SYSTEM SETTING page to adjust the appropriate settings for the viewfinder that will be used. We recommend using a HD viewfinder when the camera-recorder is used in HD mode or an SD viewfinder when it is used in SD mode. Depending on the mode, some types of video are unavailable as shown below (●: the finder shows nothing on a black screen).

Mode	Video seen through viewfinder	HD viewfinder	SD viewfinder
HD	Video from camera	○	○*1
	Playback	○	○*1*2
	Return video (HD-Y)	○	●
	1394/HD-SDI input (HD)	○	○*1
SD	Video from camera	○	○
	Playback	●	○
	Return video (VBS)	●	○
	1394/HD-SDI input (SD)	●	○

Each viewfinder shows return signals and 1394 and SDI input signals in the recording formats assigned to the camera-recorder.

*1 : Down-converted signals

*2 : When the OUTPUT SEL switch of the camera-recorder is set to CAM, a black screen is displayed.

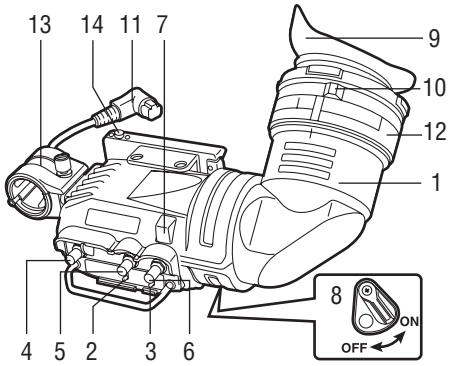

1. Viewfinder (optional accessory)

During recording or playback, the viewfinder displays the video image in monochrome. It also displays warnings, messages, zebra patterns, markers (safety zone and center markers), etc.

2. ZEBRA (zebra pattern) switch

This switch is used to display the zebra pattern in the viewfinder.

ON: Zebra pattern displayed.
OFF: No zebra pattern displayed.

3. TALLY switch

Used to control the 7.front tally lamp.

HIGH: Front tally lamp brightly illuminated.
OFF: Front tally lamp stays off.
LOW: Front tally lamp dimly illuminated.

4. PEAKING control

Used to adjust the outlines of the video image in the viewfinder for easier focusing. This does not affect the signal output from the camera.

5. CONTRAST control

Used to adjust the contrast of the video image in the viewfinder. This does not affect the signal output from the camera.

6. BRIGHT control

Used to adjust the brightness of the video image in the viewfinder. This does not affect the signal output from the camera.

7. Front tally lamp

This lamp is activated when the 3.TALLY switch is positioned at [HIGH] or [LOW], and stays on during recording. It also blinks in synchronisation with the REC lamp in the viewfinder, and provides alerts.
Use the TALLY switch to change the intensity of the lamp to ([HIGH] or [LOW]).

8. Back tally lamp

This lamp stays illuminated during shooting. It also blinks in synchronisation with the REC lamp in the viewfinder, and provides alerts.
When the lever is positioned at [OFF], the back tally lamp is hidden.

9. Eyepiece

◆Note
Do not leave the eyepiece aimed at the sun. Doing so may damage the internal components.

10. Diopter adjustment ring

Use this to make adjustments in line with your diopter, in order to obtain optimum clarity in the viewfinder image.
The adjustable range of the viewfinder view angle is shown in the following table.

Product Number	Adjustable range
AJ-HVF21G AJ-VF20WBP AJ-VF20WBE	–0.9 D to –4.4 D
AJ-VF15BP AJ-VF15BE	+1.1 D to –3.4 D

For an eyepiece for presbyopia, consult the dealer.

11. Connecting plug

12. Locking ring

13. Microphone holder

14. Viewfinder stopper

Used to attach or remove the viewfinder.

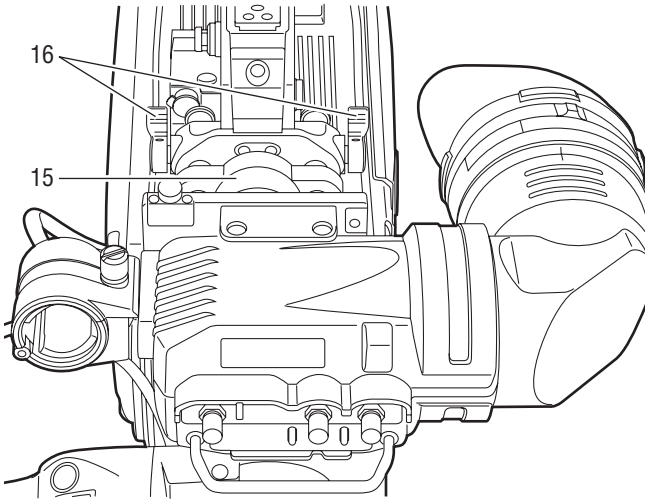

15. Viewfinder left-right position anchoring ring

Used to adjust the side-to-side position of the viewfinder.

16. Viewfinder front-back position anchoring lever

Used to adjust the fore-and-aft position of the viewfinder.

◆Note
For more information, see the instruction manual for the viewfinder.

Recording and Playback

P2 Cards

Inserting P2 Cards

◆Note

When using the camera-recorder for the first time, be sure to set the time data beforehand. On how the time data is set, see [Setting Time Data] (page 55).

1 Turn on the POWER switch.

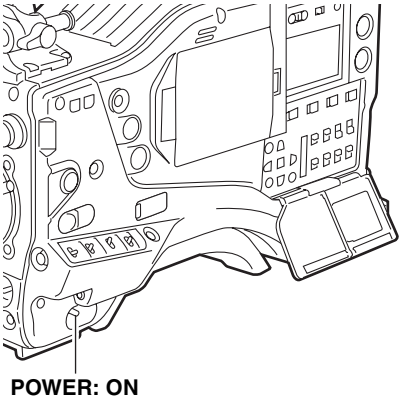

2 While pressing down the slide lock button, slide the slide-out door to the left.
The door opens.

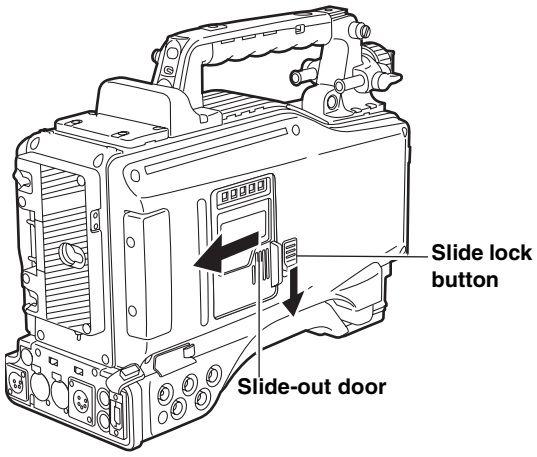

3 Insert a P2 card into the P2 card slot until the EJECT button pops up.

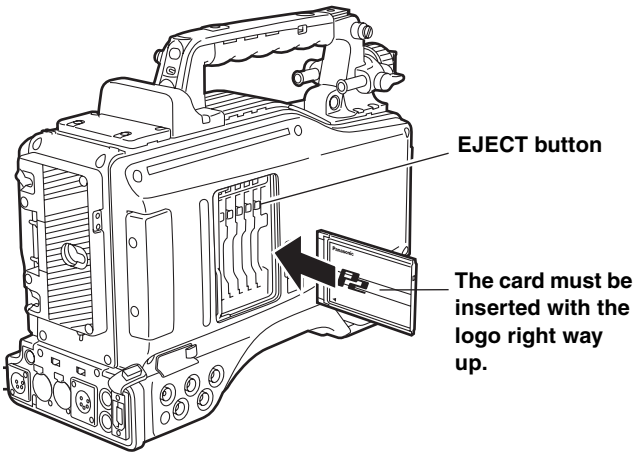

4 Tilt up the popped-up EJECT button, to lock-in the P2 card.

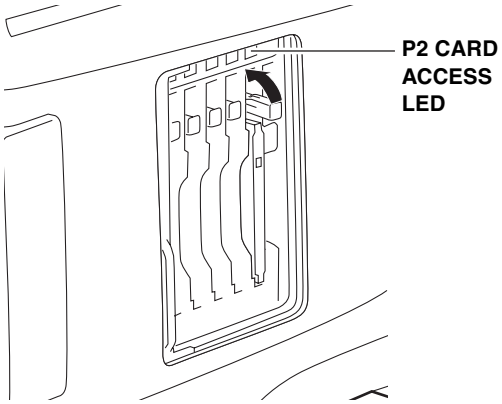

5 Insert a P2 card into camera-recorder. The P2 CARD ACCESS LED for the appropriate slot indicates the status of the P2 card.
For how the P2 card status is indicated, see [P2 CARD ACCESS LED and status of P2 cards] (page 31).

6 Close the slide-out door.

◆Note

Do not leave the slide-out door open when moving camera-recorder.

Removing P2 Cards

1 While pressing down the slide lock button, move the slide-out door to the left.
The door opens.

2 Tilt down the EJECT button.

3 Then, depress the EJECT button to release the P2 card so that you can remove it.

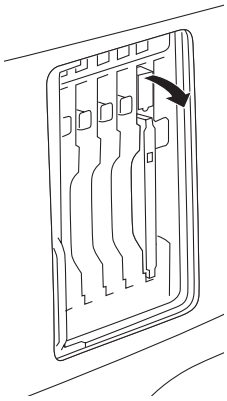

Tilt down the EJECT button.

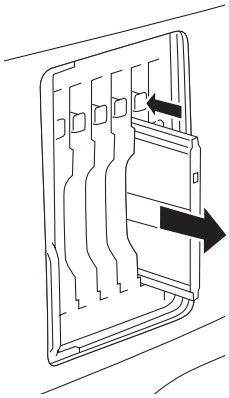

Depress the tilted-down EJECT button to release the P2 card.

◆Notes

- After insertion, do not remove the P2 card while it is being accessed or recognized (the P2 card access LED flashes orange), or the P2 card may fail. If your unit is not set to turn on the P2 CARD ACCESS LED, before removing the card ensure that PRE-RECORDING have finished after stopping recording or playback.
- If a P2 card being accessed is removed, the viewfinder displays “TURN POWER OFF” and camera-recorder gives a warning using an alarm and the WARNING LED. In addition, all P2 CARD ACCESS LEDs blink rapidly in green. If this is the case, turn the power off. For more information on warning indications, see [Warning System] (page 149).
- If a P2 card is removed while being accessed, clips on it may become irregular. Check the clips and restore them if required. For more information about how to restore clips, see [Restoring Clips] (page 121).
- If a P2 card being formatted is removed, it may be not be formatted properly. In this case, the viewfinder displays “TURN POWER OFF”. If this message appears, turn off the power, then restart camera-recorder to reformat the card.
- If a P2 card is inserted while another P2 card is being played back, the inserted P2 card is not recognised and the P2 CARD ACCESS LED for that card does not come on. Card recognition starts when the playback ends.
- Even if a P2 card is inserted in a vacant slot while recording, the media may not be recognized during the following times:
  - Immediately after PRE-RECORDING
  - Immediately before or after switching from the first P2 card for recording to the second one, when data are recorded on multiple cards spanning from one to the other (hot-swap recording)

<For Your Information>
The P2 CARD ACCESS LEDs may be set to stay off using the menu option ACCESS LED. This option can be found on the <OPTION MODE> screen, which is accessible from the SYSTEM SETTING page.

To Prevent Accidental Erasure of P2 Card Content

To prevent the content of a P2 card being accidentally erased, position the write-protect switch on the P2 card at [Protect].

◆Note

Write-protect switchover can be performed while the card is being accessed (during recording or playback), but does not take effect until access to the card ceases.

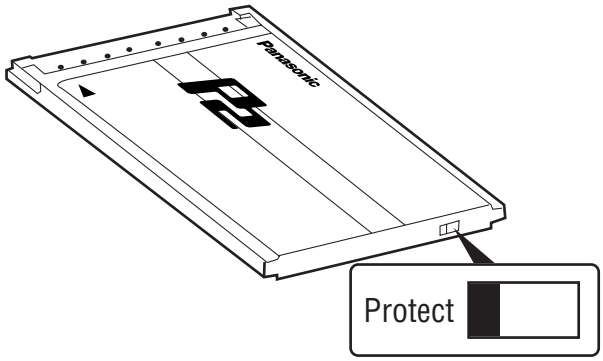

Write-protect switch

P2 CARD ACCESS LED and status of P2 cards

P2 CARD ACCESS LED	MODE CHECK indication*	Status of P2 Card
Stays on in green	ACTIVE	Writing and reading enabled
Stays on in orange	ACTIVE	Writing and reading enabled. The card is recordable (LOOP REC also enabled).
Blinks in orange	ACCESSING	Writing or reading being performed.
Blinks rapidly in orange	INFO READING	Recognaising the P2 card.
Blinks slowly in green	FULL	The P2 card has no free space. Only reading is enabled.
	PROTECTED	The write-protect switch on the P2 card is positioned at [PROTECT]. Only reading is enabled.
Stays off	NOT SUPPORTED	The card is not supported by your unit. Replace the card.
	FORMAT ERROR	The P2 card is not properly formatted. Reformat the card.
	NO CARD	No P2 card is inserted.

* The mode check indication is shown in the viewfinder. For more information, see [Viewfinder Status Indication Layout] (page 69).

The access LED located on the display window blinks when reading or writing data from or to any of the P2 cards inserted in Slots 1 - 5 or stays illuminated when any of the cards are recordable. It stays off when none of the P2 cards are recordable.

How to handle data recorded on P2 cards

The P2 card is a semiconductor memory card that is used as the recording medium in the professional video production and broadcasting devices that make up the DVCPRO P2 Series.

- Since data recorded in the DVCPRO P2 format or AVC-Intra are in a file format, they have excellent compatibility with PCs. The file structure is a unique format, which in addition to video and audio data in MXF files contains various other important information items. The folder structure links the data as shown on the right.

  Changing or deleting just one information component could make it impossible to recognize the data as P2 data or use the card in a P2 device

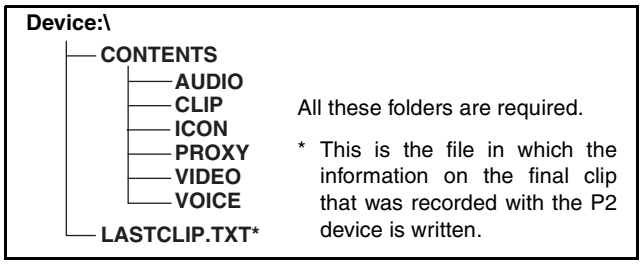

- When transferring data from a P2 card to a PC, or when rewriting data saved on a PC to a P2 card, to prevent data loss be sure to use the special P2 Viewer software. Download it from the following website.
  (Compatible with the Windows Vista, Windows XP and Windows 2000 operating systems.)

  https://eww.pavc.panasonic.co.jp/pro-av/

- When using regular IT tools such as Microsoft Windows Explorer or Apple Finder to transfer data to a PC, follow the instructions below. However, be sure to use the P2 Viewer when returning data to a P2 card.
  - Transfer the corresponding CONTENTS folder and LASTCLIP.TXT file together as a set.
    Do not transfer individual files from the CONTENTS folder.
    When copying, copy the LASTCLIP.TXT file at the same time as the CONTENTS folder.
  - When transferring multiple P2 cards to a PC, create a folder for each P2 card to prevent clips with the same name from being overwritten.
  - Do not delete data from the P2 card.
  - Before using a P2 card, be sure to format it with a P2 device.

- Microsoft and Windows are registered trademarks of the Microsoft Corporation in the USA and other countries.
- Apple and Macintosh are registered trademarks of Apple, Inc., in the USA and other countries.

Basic Procedures

This section describes the basic procedure for shooting and recording. Before you embark on a shoot, pre-inspect your system to ensure that it works properly.

* For directions on inspecting your memory card camera-recorder, see [Inspections Before Shooting] (page 142).

Battery Set-up to P2 card Insertion

1 Insert a charged battery pack.

2 Turn on the POWER switch and ensure that more than four segments of the battery-remaining amount indication bar are illuminated.

- If the number of illuminated segments is fewer than five, first check the battery placement. If placement is not the problem, replace the battery with a fully charged one.

3 Insert a P2 card and ensure that the P2 CARD ACCESS LED stays on in orange or green. Then, close the slide-out door.
When more than one P2 card slot contains a P2 card, the card in the slot with the lowest number is used first. However, regardless of slot number, a P2 card inserted later will not be accessed until the other cards have been used.

Example:
If all five slots contain P2 cards, the cards are used in order of slot numbers 1→2→3→4→5. However, if the P2 card in Slot 1 is removed and then re-inserted, the cards will be used in the following order:
2→3→4→5→1.

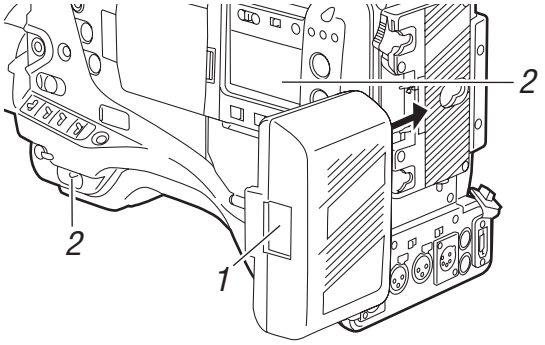

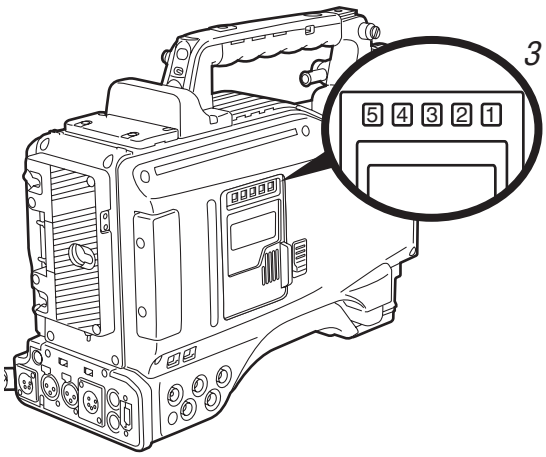

Note that the recording order is retained even if the power is turned off. When the power is next turned on, the last card written before powering-down will be the target card.

◆Note

When “SLOT1” is selected for the menu option P.ON REC SLOT SEL, recording starts from the P2 card inserted in the smallest slot number, after the power is turned on.
This option is found in the REC FUNCTION screen on the SYSTEM SETTING page.

Switch Setting

When a battery and P2 cards are installed, set the switches as detailed below, before starting to use your unit.

Setting the switches before shooting and recording

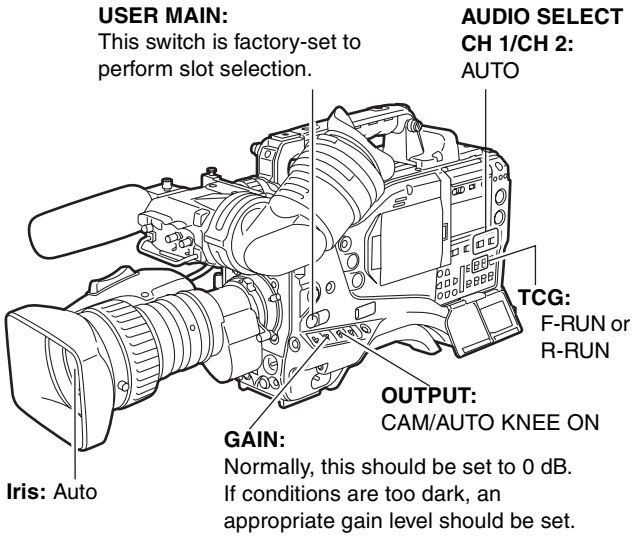

◆Notes

- The USER MAIN button is factory-set to perform the slot selection function, which selects the target card from among several P2 cards.
  When a new target P2 card is selected, the appropriate slot number appears on the P2 card remaining amount indicator in the viewfinder.
  For more information about the indications in the viewfinder, see [Viewfinder Status Indication Layout] (page 69).
- SLOT SEL function is enabled during recording. Until the P2 card on which images are recorded has been switched completely, “SLOT SEL” blinks on the viewfinder. If the “SLOT SEL” operation cannot be executed for any reason, for instance immediately after starting recording or switching the P2 card on which images are recorded, “SLOT SEL INVALID” is displayed.

White/Black Balance Adjustment to Recording Completion

For shooting, follow the steps below.

1 Select a filter according to light conditions.

2A **When the white balance is saved:**
Position the WHITE BAL switch to [A] or [B].

2B **When the white or black balance is not saved and you have no time to adjust the white balance:**
Position the WHITE BAL switch to [PRST].
This adjusts the white balance against the filter according to the position of the FILTER control.

2C **If the white balance is adjusted on the spot:**
Position the WHITE BAL switch to [A] or [B] and shoot a white test subject so that it appears at the center of the screen. Then, follow the steps below to adjust the white balance.

1. Press the AUTO W/B BAL switch toward [AWB] to adjust the white balance.
2. Press the AUTO W/B BAL switch toward [ABB] to adjust the black balance.
3. Press the AUTO W/B BAL switch toward [AWB] to adjust the white balance again.

For directions on making adjustments, see [Adjusting the White Balance] (page 45) and [Adjusting the Black Balance] (page 48).

3 Point the camera at your subject to adjust the focus, and zoom.

4 To use the electronic shutter, set the shutter speed and operation mode.
For more information, see [Setting the Electronic Shutter] (page 49).

5 Press either the REC START/STOP button, REC button on the handle or VTR button at the lens to start recording.
During recording, the REC lamp in the viewfinder stays illuminated.

6 To stop recording, press either the REC START/STOP button, REC button on the handle or VTR button at the lens.
The REC lamp in the viewfinder goes out.

Operation Buttons
During recording, all operation buttons (REW, FF, PLAY/PAUSE, STOP) are disabled.

White/Black balance adjustment to recording completion

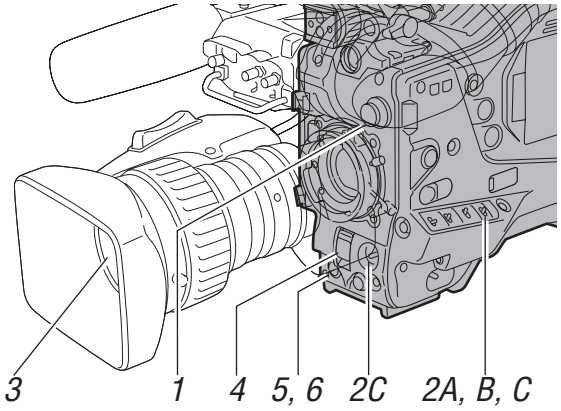

Normal Recording

REC START/STOP button, REC button on the handle or VTR button at the lens starts recording of video and sound on the P2 card. A cluster of data that consists of video and sound generated through a shooting action, together with such added information as meta data, is called a “clip”.

Normal Recording and Native Recording

In the unit, the camera’s recording method is selectable between the Native recording method with the frame rate unchanged and the normal recording method pulling the frame rate down to 59.94 or 50 frames.

Normal recording (Pull-down recording)

Images at 24P (23.98: referred to as 24P) are pulled down in 2:3 mode. Images at 30P (29.97: referred to as 30P) are pulled down in 2:2 mode and recorded as 59.94i (referred to as 60i). Images at 25P are recorded as 50i with 2:2 pulled down. 24PA (2:3:3:2 Advanced Pull down) is supported as well.
AVC-Intra does not support pull-down recording.

Example of 24P Over 60i

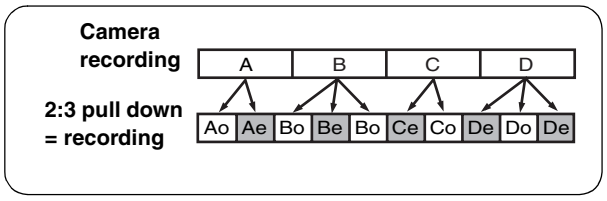

Native recoding

This recording method extracts and records effective frames at the frame rates of the AVC-Intra recording in 1080i.
Even in Native recording, the rate for outputting camera images and playback images is 59.94i or 50i that are pulled down.

Example of 1080-24PN (Native)

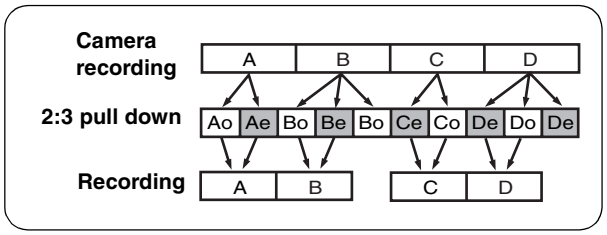

◆Notes

- The recording will start from the top frame of a five-frame cycle for 24P/24PA recording or a four-frame cycle for 24P native recording, respectively. Therefore, the time code may be discontinued when recording clips continuously in different modes during the recording cycle.
- Even if a P2 card has just been inserted, or the power has been just turned on, you can start recording using the internal memory of camera-recorder. In this case, recording cannot be stopped until the P2 card is recognised. If the inserted card is not recognized as a recordable P2 card, the record in internal memory is instantly discarded, and the message “CANNOT REC” message is displayed on the viewfinder. Press the MODE CHECK button to check P2 card status (displayed in viewfinder).

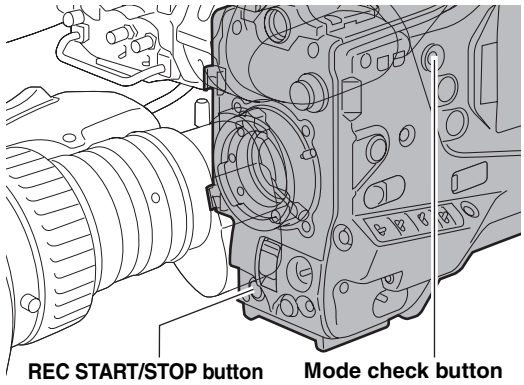

PRE-RECORDING function

The internal memory of your unit is capable of storing several seconds of video and sound data coming from the camera. This capability can be used to record video and sound several seconds before either the REC START/STOP button, REC button on the handle or VTR button at the lens is pressed to start recording. To use this function, the menu option PRE REC MODE must be set to “ON”. The storage duration of the internal memory can be set from the menu option PRE REC TIME. PRE REC MODE and PRE REC TIME menu options can be found in the REC FUNCTION screen on the SYSTEM SETTING page.
The function of the menu option PRE REC MODE may be assigned to a desired user button by using any one of the menu options USER MAIN SW, USER1 SW, or USER2 SW.
These options can be found in the USER SW screen, which is accessible from the CAM OPERATION page.
These are the options for PRE REC TIME.
Specify the duration for which data may be recorded before either the REC START/STOP button, REC button on the handle or VTR button at the lens is pressed.

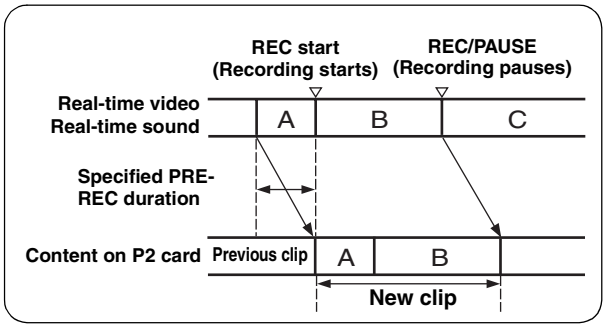

◆**Notes**

- **“P-REC” indication when the “PRE REC MODE” menu option is set to OFF**
  After recording is stopped, the “P-REC” indication remains displayed until all video and sound are recorded on the P2 card, even if the PRE REC MODE menu option is set to OFF. For details of the [P-REC] display, refer to [29.INTERVAL REC/PRE-RECORDING indication/ SD memory card remaining free space (page 74)] in [Viewfinder Status Indication Layout].
- Immediately after the power is turned on, the menu option PRE REC TIME is selected and/or the storage duration is changed, the content in internal memory will be undefined. In these situations, the video or sound will not be recorded for the duration specified, even if either the REC START/STOP button, REC button on the handle or VTR button at the lens is pressed to start recording.
- A P2 card that has been just inserted takes some time to recognise. In this situation, video or sound may not be recorded for the duration specified, even if either the REC START/STOP button, REC button on the handle, or VTR button at the lens is pressed to start a recording.
- The internal memory does not store video or sound when a playback or recording review is being performed. For this reason, no video or sound can be recorded during such operation.
- When recording starts, the time code indication (TCG) may be shown as “HOLD” until the P2 card has been recognised.
- During recording of IEEE1394 input or INTERVAL REC operation, PRE-RECORDING is not available.

Loop Recording

When two or more P2 card slots contain cards, this function allows the target P2 card to be switched in order. Even when the free space of a P2 card is used up, this function continues recording while erasing existing data.
To use this function, the menu option LOOP REC MODE must be set to “ON” The option LOOP REC MODE can be found in the <REC FUNCTION> screen on the SYSTEM SETTING page.

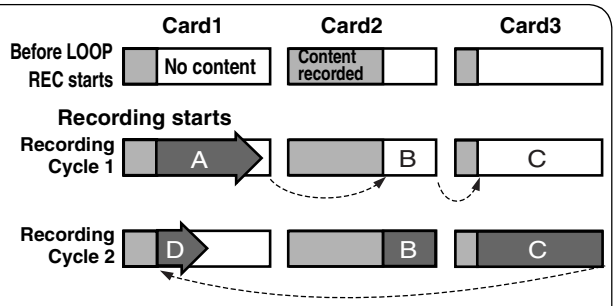

Data are recorded by connecting the unrecorded sections on the P2 card (in the sequence of A to B to C). When the remaining recording capacity is less than 30 seconds, A is deleted, and data are record on C up to FULL (remaining memory capacity is 0), and then new data are recorded (D).

◆Notes

- When the LOOP REC capability is used, each P2 card must have at least one minute of free space.
- During LOOP REC, the P2 CARD ACCESS LEDs for all target P2 cards illuminate in orange. Note that if any of the target P2 card is removed, LOOP REC stops.
- When the menu option LOOP REC MODE is set to ON, the viewfinder and display window both show “LOOP”. However, when only one card is inserted, or when each card has less than one minute of free space, the LOOP REC capability does not work, even if the option LOOP REC MODE is set to ON. If this is the case, the indication “LOOP” flashes in the viewfinder and on the display window.
- When the menu option LOOP REC MODE is set to ON, the P2 card remaining free space indicates the minimum guaranteed recording time. The minimum guaranteed recording time means the guaranteed time or length of recorded data when LOOP REC stops immediately after deleting old data.
- During recording of IEEE1394 input or INTERVAL REC operation, LOOP REC is not available.

Terminating the LOOP REC Mode

You can terminate the LOOP REC mode by either:
- Turning off the POWER switch of camera-recorder; or
- Setting the menu option LOOP REC MODE to “OFF”.

Interval Recording

It is possible to record in intervals of one frame as the shortest length by using the internal memory of the unit.
To use this option, open the REC FUNCTION screen from the SYSTEM SETTING page, and set the interval recording mode, REC TIME, PAUSE TIME and TAKE TOTAL TIME for the menu option INTERVAL REC MODE. When the settings are finalized, TOTAL REC TIME needed on the P2 card is automatically calculated and displayed.

The following are the options for INTERVAL REC MODE:

OFF:
No interval recording performed.

ON:
Interval recording performed.

ONE SHOT:
Performs “one-shot” recording for the duration specified under the REC TIME option by pressing either the REC START/STOP button, REC button on the handle, or VTR button at the lens.

◆Notes

- When executing interval recording, data cannot be output with IEEE 1394. When the 1394 CONTROL is set to “BOTH”, it is also impossible to control external devices.
- The shortest recording time, stand-by time, and the set value of the cut-off unit frame number may vary with the recording method as follows.

Recording method		Unit frame number
1080i	60i, 50i 30P, 25P (Pull down) 30PN, 25PN (Native)	1 frame
	24P, 24PA (Pull down)	5 frames
	24PN (Native)	4 frames
SD mode	60i, 50i 30P, 25P (Pull down)	1 frame
	24P, 24PA (Pull down)	5 frames

Shooting procedures when INTERVAL REC is ON

1 Following basic operations of shooting and recording according to “Basic Procedures”, lock the camera securely.

2 Check that “i” is blinking in the display, and that the interval recording mode is selected.

3 Press either REC START/STOP button, REC button on the handle, or VTR button at the lens.
Interval recording starts. Recording automatically stops after the specified TAKE TOTAL TIME, and the entire recording is generated as one clip.
“i” starts blinking in the display when the internal recording mode is selected. “iREC” illuminates after recording starts. “iREC” blinks during a pause.
The display in the viewfinder is the same as that in the display window.
The tally lamp illuminates during recording. If PAUSE TIME is set at 2 minutes or longer, the tally lamp illuminates at 5-second intervals to indicate that it is paused. The tally lamp also blinks 3 seconds before recording starts.

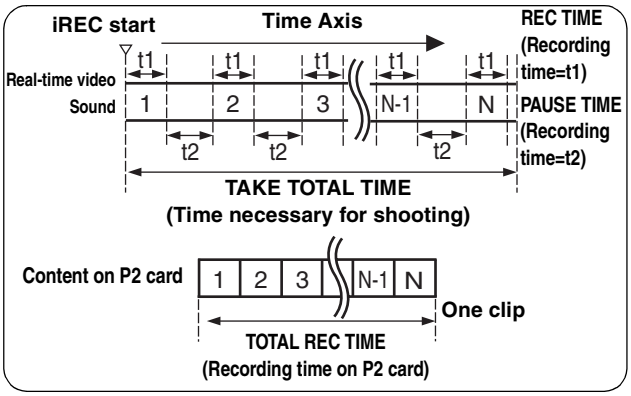

To stop recording

Press the STOP button. Recording stops. Then, the camera accesses the P2 card to record the video stored in memory before recording stops. The record from the beginning of the interval recording to the moment of pressing the STOP button is generated as one clip.

For continuous recording

Press either the REC START/STOP button, REC button on the handle, or VTR button at the lens, again. Interval recording resumes.

To stop the Interval recording mode

● Setting the menu option INTERVAL REC MODE to “OFF”.

When INTERVAL REC HOLD is set to “OFF”, the mode returns to ordinary recording mode if the POWER switch of the unit is turned OFF.
If INTERVAL REC HOLD is set to “ON”, the interval recording mode will not change even if the POWER switch is turned OFF.

Shooting procedures for the ONE SHOT mode of INTERVAL REC

After setting the ONE SHOT mode of INTERVAL REC, follow these steps:

1 Following basic operations of shooting and recording according to “Basic Procedures”, lock the camera securely.

2 Press either the REC START/STOP button, REC button on the handle, or VTR button at the lens.
The AJ-HPX3000 automatically goes into ONE SHOT pause mode after the specified REC TIME.

3 Performs recording for the duration specified under the REC TIME option by pressing either the REC START/STOP button, REC button on the handle, or VTR button at the lens, and returns to ONE SHOT pause mode.

4 Press the STOP button.
The video and sound stored in memory are generated as one clip.

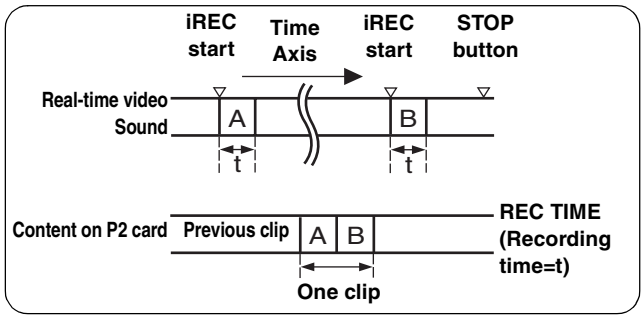

To check the previous recording during a pause

Press the RET button at the lens to put the AJ-HPX3000 into REC REVIEW mode. ONE SHOT operation continues after the REC REVIEW.

To divide clips or to change the P2 card used for recording

Even during ONE SHOT mode, clips will not be generated on the P2 card until the STOP button is pressed. Press the STOP button, and stop ONE SHOT mode operation.

To stop the ONE SHOT mode of INTERVAL REC

● Set the menu option INTERVAL REC MODE to “OFF”.

When INTERVAL REC HOLD is set to [OFF], the mode returns to ordinary recording mode if the POWER switch of the unit is turned OFF.
If INTERVAL REC HOLD is set to [ON], the ONE SHOT mode will not change even if the POWER switch is turned OFF.

During INTERVAL REC mode general notes

- **Sound**
  By selecting ON/OFF for the menu option AUDIO REC in the REC FUNCTION screen, it is possible to specify whether or not sound will be recorded during interval recording.

- **Record/Playback Buttons**
  During interval recording, all operation buttons other than STOP (REW, FF, PLAY/PAUSE) are disabled. However, during a pause in ONE SHOT mode, REC REVIEW can be executed with the RET button on the lens.

- **If the power is turned off during recording**
  If the AJ-HPX3000 is turned off during interval recording, the video stored in memory is recorded onto the P2 card, and then the camera automatically turns off.

- **To start emergency recording during a pause**
  By setting the REC button to USER MAIN or USER1/USER2, emergency recording can be performed during a pause by pressing the button. Pause time measurement continues after such emergency recording.

◆Note

However, this function does not work when the recording signals are in 24P, 24PA or 24PN (Native) mode.

- **Time code indication**
  When recording starts, the time code (TCG) display may not update until the unit recognizes the P2 card.

- **Removing cards**
  During INTERVAL REC mode operation, the P2 card access LED for the inserted P2 card blinks in orange. Do not remove the P2 card during this status. If you should remove the card accidentally, restore clips. However, even if the clips are restored, the last 3 to 4 seconds up to a maximum of about 10 seconds of the recording may be lost if the P2 card is removed while recording onto multiple P2 cards. For more information on how to fix clips, see [Restoring Clips] (page 121).

- **Operation mode**
  INTERVAL REC does not work when “1394” is selected for the menu option REC SIGNAL. The menu option REC SIGNAL is found in the SYSTEM MODE screen on the SYSTEM SETTING page. For more information, see [Recording Setting and Operation Mode] (page 42).

- **Thumbnail operation and menu operation**
  Thumbnail operation does not work during the INTERVAL REC mode operation. Press the STOP button before operating thumbnails.
  When standby time is set to 1 minute or more or when in ONE SHOT mode, the following restrictions apply even though the menu can be operated during stand-by mode.
  - The respective settings or SYSTEM MODE, REC SIGNAL, CAMERA MODE, REC MODE, 25M REC CH SEL, and PC MODE cannot be changed.
  - The respective settings for SD CARD READ/WRITE, LENS FILE CARD R/W, READ USER DATA, and READ FACTORY DATA cannot be executed.

Recording Review Function

When recording is paused, pressing the RET button automatically locates the last two seconds of video just recorded, and the viewfinder provides video playback.
After playback, the camera-recorder is again ready to start recording.
The picture location/playback duration can be increased to up to 10 seconds by continuously pressing the RET button. For short clips, however, when the start of a clip is located, continuously pressing the RET button does not play back any clips before that clip.
The function of the RET button may be assigned to a desired user button by using one of the menu options USER MAIN SW, USER1 SW or USER2 SW. These options can be found in the <USER SW> screen on the CAM OPERATION page.
When recording is paused, pressing the PLAY/PAUSE button plays back the last recorded clip, from the beginning. After completion of playback, the camera-recorder enters the stopped state.

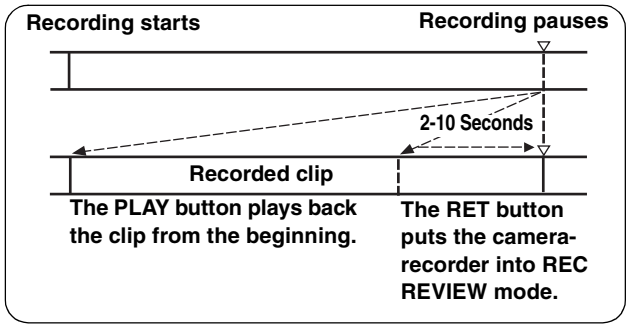

◆Notes

- Set the menu option RET SW (found on the SW MODE for CAM OPERATION) to R. REVIEW.
- When the OUTPUT SEL switch on the side panel is positioned at [MEM], the video for REC REVIEW is output from the video output connectors (VIDEO OUT and MON OUT connectors), and also to the viewfinder. Note that when a backup device is connected to back up the video the pictures for REC REVIEW are backed up.

Normal and Variable Speed Playback

The PLAY/PAUSE button provides monochrome playback through the viewfinder and color playback on the LCD monitor. A color video monitor connected to the VIDEO OUT or MON OUT connector of camera-recorder also provides color playback.
The VIDEO OUT connector outputs an SDI playback (to view the playback, the OUTPUT SEL switch on the side panel must be positioned to [MEM]).

Variable speed playback

The FF and REW buttons provide 32× and 4× fast playbacks and fast reverse playbacks.
When playback is paused, the FF button locates the beginning of the next clip while maintaining the pause mode.
When playback is paused, the REW button locates the beginning of the current clip while maintaining the pause mode.

◆Notes

- The camera-recorder cannot play back clips where the SYSTEM MODE differs. If this is the case, set the SYSTEM MODE of camera-recorder to the format of the desired clip before playing it back.
- When a P2 card has been just removed or inserted, or when the power has been just turned on for playback, it may take some time for camera-recorder to read clip information. If this is the case, the viewfinder displays “UPDATING”. If data is played back when the P2 card is being recognized, the message “CANNOT PLAY” will be displayed.
- If a P2 card is inserted while another P2 card is being played back, the clips on the inserted P2 card will not be played back. A P2 card inserted during playback will be recognised after playback ends.
- If you perform variable speed playback on a clip split across more than one P2 card, sound may disappear for a moment. This is not a fault.

Text Memo Function

Text memos are time-coded thumbnails added to any video point when a clip is being recorded or played back. The Text Memo button adds text memo information at the appropriate point. You can edit added text memos using the P2 viewer.
Through a thumbnail display, you can choose and play back the text memo point or copy any portion. For more information, see [Text Memo] (page 119).

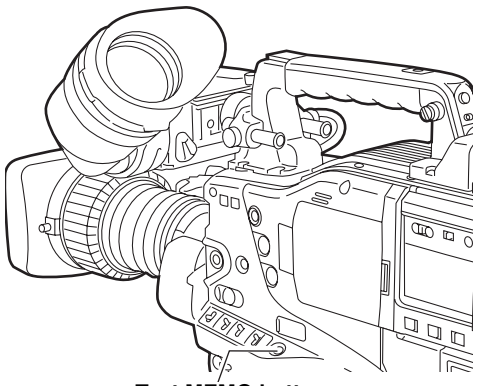

Text MEMO button

◆Notes

- One clip can have up to 100 text memos.
- Text memos can also be recorded when the LCD monitor is in thumbnail mode. In this case, the text memo is added to the position on the clip where the cursor is set (normally at the beginning) only.
- Text memos cannot be recorded when the color bar is output or the unit is in LOOP REC mode and INTERVAL REC mode.
- For a clip with voice memos added through the AJ-SPX800 or any other camera-recorder, you can record up to 100 text and voice memos in combination. For information about voice memos, see the instruction manual for the AJ-SPX800.

Shot Mark Function

A shot mark is added to the thumbnail of a clip to distinguish that clip from others. With the LCD monitor, only clips that have shot marks can be viewed and/or played back.

Adding Shot Marks

To add a shot mark during recording, press the SHOT MARK button. The viewfinder displays “MARK ON” and adds a shot mark to the thumbnail of the appropriate clip. Another press of the button erases the shot mark.

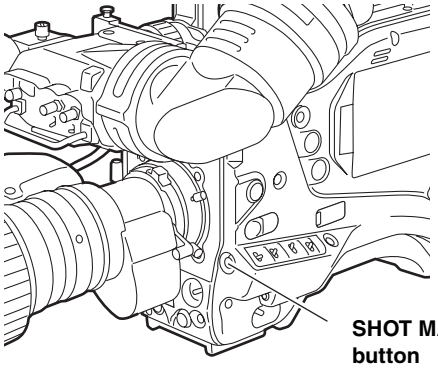

SHOT MARK button

Shot marks may also be added or erased using clip thumbnails. For more information, see [Shot Mark] (page 119).

◆Notes

- When the color bar is output or the unit is in LOOP REC mode and INTERVAL REC mode, it is impossible to add/delete shot marks.
- It is impossible to add shot marks to incomplete clips (refer page 115).
- For clips recorded on plural P2 cards or clips split on a P2 card (refer to Notes on page 10), a shot mark is added to the top clip only.

Recording Setting and Operation Mode

AJ-HPX3000 recording mode works according to the priorities outlined in the following table, relative to the setting of the menus and switches.

Functional operation mode	Menu switches related to system/recording					Buttons		Proxy recording (optional)
	PC MODE	REC SIGNAL	INTERVAL REC MODE	LOOP REC MODE	PRE REC MODE	Recording a Text Memo	Shot Mark	
USB device	USB DEVICE	Disabled	Disabled	Disabled	Disabled	Disabled	Disabled	Disabled
USB host	USB HOST	Disabled	Disabled	Disabled	Disabled	Enabled	Enabled	Disabled
IEEE1394 Input record	OFF	1394	Disabled	Disabled	Disabled	Enabled	Enabled	Disabled
INTERVAL REC		CAMERA VIDEO SDI (optional)	ON or ONE SHOT	Disabled	Disabled	Disabled	Disabled	Disabled
LOOP REC			OFF	ON	Enabled 1s - 8s	Disabled	Disabled	Disabled
Normal Recording				OFF	Enabled 1s - 8s	Enabled*	Enabled*	Enabled

* Disabled for color bars

Adjustments and Settings for Recording

Multi Format

Video system and Recording format

The unit uses an interlace/progressive scan (reading all pixels) switchable type CCD.
With combinations of the SYSTEM MODE and CAMERA MODE menu options on the SYSTEM MODE screen on the SYSTEM SETTING menu, you can select an image system from among 12 types including HD (1080i) and SD formats.
In addition, through the REC SIGNAL menu option, you can record external input signals such as 1394 and SDI (optional).

Selecting a recording signal and method

SYSTEM MODE menu option

Allows you to select a combination of system frequency (59.94 Hz or 50 Hz) and signaling system (1080i, 480i, or 576i). When a change has been made to the SYSTEM MODE option, the viewfinder indicates "TURN POWER OFF." Then, turn the POWER switch of the camera-recorder off and wait five seconds or longer before turning the camera-recorder on again.

REC SIGNAL menu option

CAM Signals from the camera are recorded. The CAMERA MODE option allows you to select a camera operation mode (frame mode).

1394 Signals from the DVCPRO connector are recorded. For information about the 1394 connection, see [Connection through the DVCPRO connector] (page 133).

VIDEO Signals from the GENLOCK IN connector are recorded when the camera-recorder is in SD mode (480-59.94i or 576-50i).

SDI Signals from the SDI IN connector are recorded (when the AJ-YA350AG, an SDI IN option, is installed).

◆Notes

- When VIDEO is selected, video may produce noise if the signals from GENLOCK IN are non-standard signals.
- When SDI is selected, the time code or UMID superimposed on SDI input signals are not recorded.

CAMERA MODE menu option

Used to select a camera operation mode when the option REC SIGNAL is set to CAM. For information about the behavior for each setting, see [Recording formats and output connector signal formats] (page 44) .

◆Note

When the camera has been switched from 60i or 30P to 24P or 24PA, video may produce noise for a moment because the pull-down five-frame cycle is adjusted. This is not an abnormal condition.

REC MODE menu option

Used to select the recording mode

For HD mode (1080i)

AVC-I 50

The AVC-Intra50 format is used to record video. The native recording is applied to the 30P, 24P and 25P modes.

AVC-I 100

The AVC-Intra100 format is used to record video. The native recording format applies to the 30P, 24P and 25P modes.

DVCPRO HD

The DVCPRO HD format is used to record video. The pull-down recording is for the 30P, 24P, 24PA and 25P modes.

◆Note

When AVC-Intra 50 or AVC-Intra 100 is selected, the 24PA mode cannot be selected.

For SD mode (480i, 576i)

DVCPRO50

The DVCPRO50 format (50 Mbps) is used to record video.

ASPECT menu option

Used to select the aspect ratio for the SD mode (480i or 576i)

16 : 9 The 16:9 aspect ratio is used to record video.

4 : 3 The 4:3 aspect ratio is used to record video.

Recording formats and output connector signal formats

The table below shows the formats used to record signals from the CCD and externally input signals along with the formats for signals output from the output connectors.

Menu setting				Recording/Output										
SYSTEM MODE item	REC MODE item	REC SIGNAL item	CAMERA MODE item	Recording frame mode	Output frame mode	P2 card recording*1		VIDEO OUT (HD SDI)*2 and SDI OUT connectors		VIDEO OUT (SD SDI)*3 and SDI OUT connector		VIDEO OUT (VBS), MONOUT, and REMOTE connectors	When VF connector is set to HD VF	When VF connector is set to SD VF
						Video	Sound	Video	Sound	Video	Sound	Video		
1080-59.94i	DVCPRO HD	CAM	60i	60i	60i	1080i	4ch	1080i	4ch	525i	4ch	525i	1080i	525i
			30P	30P Over 60i	30P Over 60i									
			24P 24PA	24P Over 60i 24PA Over 60i	24P Over 60i 24PA Over 60i									
		1394	—	60i	60i									
		SDI (optional)	—	60i	60i									
	AVC-I 100 AVC-I 50	CAM	60i	60i	60i									
			30P	30PN (Native)	30P Over 60i	1080P								
			24P	24PN (Native)	24P Over 60i									
		SDI (optional)	—	60i	60i	1080i								
1080-50i	DVCPRO HD	CAM	50i	50i	50i	1080i	4ch	1080i	4ch	625i	4ch	625i	1080i	625i
			25P	25P Over 50i	25P Over 50i									
		1394	—	50i	50i									
		SDI (optional)	—	50i	50i									
	AVC-I 100 AVC-I 50	CAM	50i	50i	50i									
			25P	25PN (Native)	25P Over 50i	1080P								
		SDI (optional)	—	50i	50i	1080i								
480-59.94i	DVCPRO50	CAM	60i	60i	60i	480i	4ch	—*4	—*4	525i	4ch	525i	1080i (Playback not output)	525i
			30P	30P Over 60i	30P Over 60i									
			24P 24PA	24P Over 60i 24PA Over 60i	24P Over 60i 24PA Over 60i									
		1394	—	60i	60i								—	
		VIDEO	—	60i	60i									
		SDI (optional)	—	60i	60i									
576-50i	DVCPRO50	CAM	50i	50i	50i	576i	4ch	—*4	—*4	625i	4ch	625i	1080i (Playback not output)	625i
			25P	25P Over 50i	25P Over 50i									
		1394	—	50i	50i								—	
		VIDEO	—	50i	50i									
		SDI (optional)	—	50i	50i									

*1 The time code, user bits, and UMID are recorded.

*2 The time code, user bits, and UMID (selectable between ON and OFF) are output.

*3 The EDH (selectable between ON and OFF) and UMID (selectable between ON and OFF) are output. The time code or user bits are not output.

*4 The SD SDI output is maintained.

30P Over 60i:

This operates in the interlace mode in 60 fields. This processes video signals of the same time into the odd field and the even field and records them on tape as video signals in the respective fields.

Adjusting the White balance and Black Balance

To record high-quality video with the unit, the black and white balances must be adjusted according to conditions.
For higher quality, it is recommended that the adjustments should be made in this order AWB (white balance adjustment) → ABB (black balance adjustment) → AWB (white balance adjustment).

Adjusting the White Balance

Whenever light conditions change, the white balance must be re-adjusted.
To adjust the white balance, follow the steps below.

1 Set the switches as illustrated below.

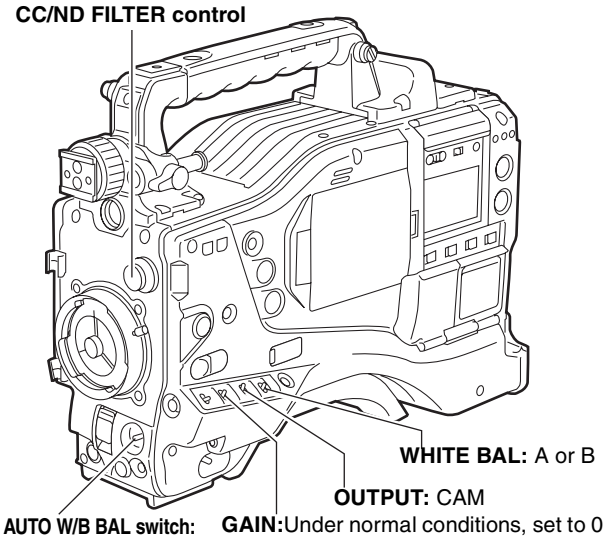

2 Adjust the CC/ND FILTER control according to the light conditions.

◆Note

For examples of CC/ND FILTER adjustments, see [Shooting and Recording/Playback Functions Section] (page 18).

3 Place a white pattern at a point where the light conditions match those for the light source of the subject. Then zoom-in on the white pattern so that white color appears in the screen. A white object (cloth or wall) may be used instead of a white pattern. The illustration below shows the required size for the white space.

◆Notes

- Do not include a high-intensity spot in the screen.
- The white object must appear at the center of the screen.

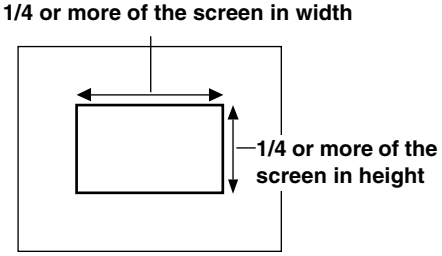

4 Adjust the lens iris.

5 Flip up the AUTO W/B BAL switch so that it is positioned at [AWB], then release it.
The switch returns to the central position with the white balance automatically adjusted.

◆Note

To cancel automatic white balance adjustment in process (the viewfinder displays “AWB ACTIVE”), re-position the AUTO W/B BAL switch at [AWB].
If automatic adjustment is cancelled, the value in effect before automatic adjustment will be used.

6 During an adjustment, the viewfinder displays the following message:

```
AWB ACTIVE
```

7 The adjustment will take effect in a few seconds, and the following message will appear:
The adjusted value is automatically stored in the memory specified in Step ***1*** ([A] or [B]).

```
AWB A OK 3.2K
```

8 For the 3200K CC/ND filter, if the subject’s color temperature is lower than 2300K or higher than 9900K the following message appears:
If the arrow points down (↓) the actual color temperature is lower than the temperature indicated.
If the arrow points up (↑) the actual temperature is higher than the temperature indicated.

```
AWB A OK 2.3K ↓
```

Detection area for the white balance

The detection area for the white balance is selectable between 90%, 50% and 25%, using the menu option AWB AREA.
This option can be found in the <WHITE BALANCE MODE> screen, which is accessible from the CAM OPERATION page.
The detection area is factory-set to 25%.

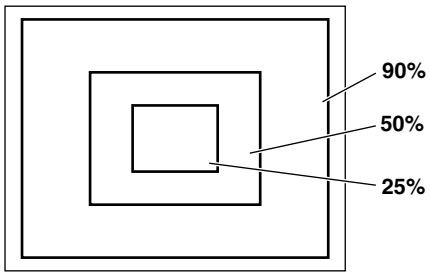

When you have no time to adjust the white balance

Position the WHITE BAL switch at [PRST].
This adjusts the white balance for the filter according to the position of the CC/ND FILTER control.

When the white balance has not been automatically adjusted

When the white balance has not been successfully adjusted, the viewfinder displays an error message.
If one of the error messages listed below appears, take the appropriate steps, then adjust the white balance again.
If the error message appears after repeated readjustments, the interior of the unit must be inspected. For more information, contact your distributor.

Error message	Description	Remedies
COLOR TEMP. HIGH	The color temperature is too high.	Select an appropriate filter.
COLOR TEMP. LOW	The color temperature is too low.	Select an appropriate filter.
LOW LIGHT	There is insufficient light.	Increase the light level or gain.
LEVEL OVER	There is too much light.	Decrease the light level or gain.
CHECK FILTER	The FILTER control is displaced.	Check the FILTER control.
TIME OVER	AWB was not completed within the time allowed.	Shooting conditions may be unstable. If flicker occurs, press the shutter and readjust the AWB under stable conditions.

Retaining white balances

Each value in memory is retained even if the camera-recorder is turned off; it will not be lost until the white balance is re-adjusted. White balances are stored in either of two systems: A or B.
When the menu option FILTER INH is set to “ON” (default), each system stores only one value. If this is the case, the values are not synchronised with the filters.
This option can be found in the <WHITE BALANCE MODE> screen, which is accessible from the CAM OPERATION page.
When the menu option FILTER INH is set to “OFF”, the adjusted value for each filter can be automatically stored in the memory that corresponds to the position of the WHITE BAL switch (A or B). Your unit has four built-in filters; it stores eight (4 × 2) adjusted values.
When the S. GAIN (super gain) function is activated, the AWB switch does not function and the value set for PRST is used.

Setting Color Temperature Manually

The white balance can be manually adjusted by setting the color temperature. Manual color temperature settings can be performed for each of the WHITE BAL switch positions: PRST, A and B.
The color temperature is set using the menu options COLOR TEMP PRE, COLOR TEMP A, and COLOR TEMP B.
These options can be found in the <WHITE BALANCE MODE> screen, which is accessible from the CAM OPERATION page.
There are two types of color temperature adjustment for COLOR TEMP PRE: VAR or 3.2K/5.6K Switchable.

VAR: Selectable within the range from 2300K to 8000K.

3.2K/5.6K:
Switchable between 3200K and 5600K.

Refer to [WHITE BALANCE MODE] (page 179).

◆Note

Even if the color temperature has been manually set, automatic adjustment of the white balance (AWB) records the color temperature at the time of AWB at the position where the WHITE BAL switch was located. When the CC filter position is switched, the value for the color temperature changes.

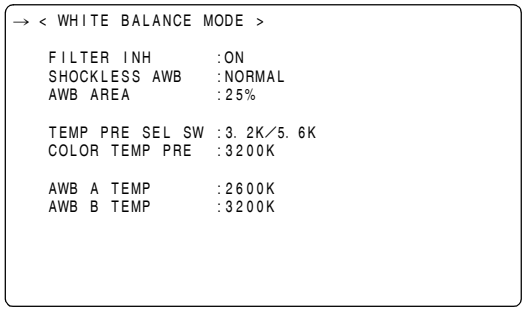

Viewfinder displays related to white balance

See [Viewfinder Screen Status Displays] (page 68).

Adjusting the Black Balance

The black balance must be adjusted when:

- You use your unit the first time;
- Your unit has not been used for some time;
- The ambient temperature has changed substantially;
- The gain switchover value has been changed; or
- S.GAIN (super gain) has been set with the USER MAIN/ USER1/USER2 button.

1 Set the switches as illustrated below.

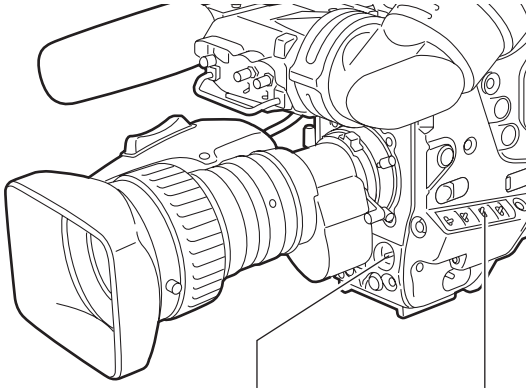

AUTO W/B BAL switch: Used to perform ABB.

OUTPUT: CAM

2 Tilt the AUTO W/B BAL switch so that it is positioned at [ABB], then release it.
The switch returns to the central position with the black balance automatically adjusted.

3 During adjustment, the viewfinder displays the following message:

```
ABB ACTIVE
```

◆Note

During adjustment, the lens iris automatically becomes CLOSE.

4 The adjustment will take effect in a few seconds and the following message will appear:

```
ABB OK
```

The adjusted value is automatically stored in the memory.

◆Notes

- Ensure that the lens connector is connected and the lens iris is CLOSE.
- During a black balance adjustment, light is automatically cut off.
- During a black balance adjustment, the gain switchover circuit is automatically switched.
  The viewfinder screen may flicker and/or display noise; this is not a failure.
- If you find the black shading annoying after performing an auto black balance adjustment, adjust the black shading. To do so, go to the menu option DETECTION, move the cursor (→), then press the JOG dial button. The menu option DETECTION can be found in the <BLACK SHADING> screen, which is accessible from the MAINTENANCE page.
  By turning on the SHD.ABB SW CTL in <SW MODE> (page 178) and then continuously pressing the ABB switch for 8 seconds or longer, black shading can be automatically adjusted after the Auto-Black-Balance operation. While the black shading is being adjusted, ensure that the lens iris is closed completely until the “B-SHD OK” message is displayed in the viewfinder.
  However, when the remote control unit (AJ-RC10G: optional accessory) is connected, automatic black shading cannot be executed even if the ABB switch is held down.
- To cancel the automatic black balance adjustment in process (the viewfinder displays “ABB ACTIVE”), flip the AUTO W/B BAL switch down to [ABB] again.
  If automatic adjustment is cancelled, the value in effect before automatic adjustment will be used.

Retaining black balances

Each value in memory is retained even if the camera-recorder is turned off.

Setting the Electronic Shutter

This section provides a description of the electronic shutter, together with setting and handling directions.

Shutter Modes

The table below lists the shutter modes in which the unit's electronic shutter can be used as well as the shutter speeds which can be selected.

To use the fixed shutter speed

- For eliminating flicker due to lighting
- For shooting fast moving subjects clearly

To use the shutter speed of SYNCRO SCAN

- For shooting monitor screens in a way that minimizes the pattern of horizontal lines
- For shooting images when adding effects to the subjects' movement

To use the half shutter speed (HALF)

- For shooting images when adding effects as if taken with film

◆Notes

- No matter in which mode the electronic shutter is used, the higher the shutter speed, the lower the camera's sensitivity.
- When the aperture is in the automatic mode, it will increasingly open and the depth of focus will become shallower as the shutter speed is increased.

Mode	Video system	CAMERA MODE	Shutter speed	Half shutter speed	Variable range for SYNCRO SCAN	
HD	1080-59.94i	60i	1/100, 1/120, 1/250, 1/500, 1/1000, 1/2000, HALF 180deg, 172.8deg, 144.0deg, 120.0deg, 90.0deg, 45.0deg	1/120	1/61.7 - 1/7200	3 deg - 350deg (1.0deg step)
	1080-29.97P	30P		1/60	1/30.9 - 1/3600	
	1080-23.98P	24P		1/48	1/24.7 - 1/2880	
	1080-23.98PA	24PA		1/48	1/24.7 - 1/2880	
SD	480-59.94i	60i		1/120	1/61.7 - 1/7200	
	480-29.97P	30P		1/60	1/30.9 - 1/3600	
	480-23.98P	24P		1/48	1/24.7 - 1/2880	
HD	1080-50i	50i	1/60, 1/120、1/250, 1/500、1/1000, 1/2000、HALF 180deg, 172.8deg, 144.0deg, 120.0deg, 90.0deg, 45.0deg	1/100	1/51.4 - 1/6000	
	1080-25P	25P		1/50	1/25.7 - 1/3000	
SD	576-50i	50i		1/100	1/51.4 - 1/6000	
	576-25P	25P		1/50	1/25.7 - 1/3000	

Setting the Shutter Mode and Speed

The shutter speed in any shutter mode is set using the SHUTTER switch.
In SYNCHRO SCAN mode, shutter speed can be switched easily, using the synchro-scan adjustment switches (+/–) on the side panel.
Note that the range of selectable shutter speeds may be pre-defined; whether or not to use the SYNCHRO SCAN mode may be determined through the <SHUTTER SPEED> and <SHUTTER SELECT> screens. These screens are accessible through the menu on the CAM OPERATION page.
The selected shutter speed is retained even if the unit is turned off.

```
→ < SHUTTER SPEED >

    SYNCHRO SCAN   :ON
    POSITION1      :ON
    POSITION2      :ON
    POSITION3      :ON
    POSITION4      :ON
    POSITION5      :ON
    POSITION6      :ON
```

```
→ < SHUTTER SELECT >

    POSITION1 SEL   :1/100
    POSITION2 SEL   :1/120
    POSITION3 SEL   :1/250
    POSITION4 SEL   :1/500
    POSITION5 SEL   :1/1000
    POSITION6 SEL   :1/2000
```

1 Press the SHUTTER switch, positioned at [ON], towards [SEL].

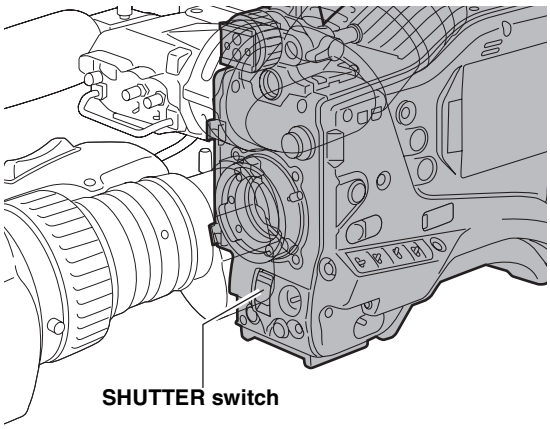

2 Once more, press the SHUTTER switch towards [SEL]. Repeat this switchover until the desired mode or speed appears in the viewfinder screen.
If all modes and speeds are available, the display changes in the following order:

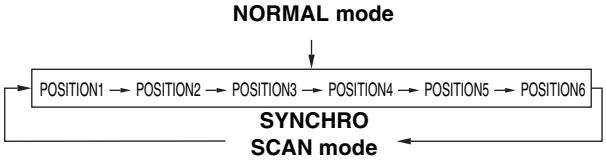

Viewfinder displays relating to the shutter

See [Viewfinder Screen Status Displays] (page 68).

Placing the Camera-recorder in SYNCHRO SCAN Mode

To place the camera-recorder in SYNCHRO SCAN mode, follow the steps below.

1 Press the SHUTTER switch positioned at [ON] towards [SEL], to place the camera-recorder in SYNCHRO SCAN mode.

2 In the SYNCHRO SCAN mode, it is possible to change the shutter speed continuously by operating the SYNCHRO SCAN (+/–) buttons.

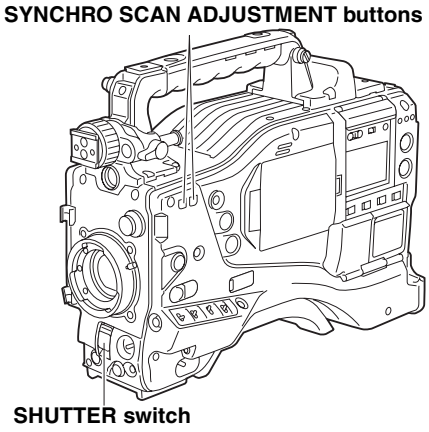

3 The shutter speed display in synchro scan mode is switchable between second indication and angle indication.
For details, refer to [SYNCHRO SCAN DISP.] (page 172).

Assigning Functions to USER MAIN, USER1 and USER2 Buttons

The USER MAIN, USER1, and USER2 buttons can be assigned user-selected functions.
To select desired functions, use the menu options USER MAIN SW, USER1 SW and USER2 SW. These options can be found in the <USER SW> screen, which is accessible from the CAM OPERATION page.

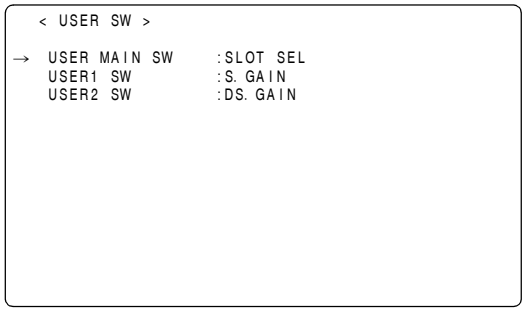

Selectable Functions

INH: No function assigned.

S.GAIN: S.GAIN function assigned.

DS.GAIN: DS.GAIN function assigned.

S.IRIS: Super Iris function assigned.
This is useful for backlight compensation.

I.OVR: Iris Override function assigned.
The target (reference) value in Auto Iris mode must be changed.
To change the target value, put the unit into this mode and press the JOG dial button. Turn the JOG dial button clockwise or anti-clockwise to change the value. The iris indication section of the viewfinder screen displays "+", "+ +", "–", or "– –".
When the desired value is displayed, stop turning the JOG dial button. Then, press the dial button to accept that value.
Note that once the mode is cancelled or the power is turned off the original reference value will be used again.

- **+:** Iris opens up by 0.5.
- **+ +:** Iris opens up by 1.
- **–:** Iris closes down by 0.5.
- **– –:** Iris closes down by 1.
- **No indication:** The reference value is used.

S.BLK: Super Black function assigned.
This function lowers the black level to the pedestal level or below.

B.GAMMA: The BLACK GAMMA function is allocated.
This function highlights the black gradations.
Regardless of the value set in the BLACK GAMMA item on the menu (<LOW SETTING> screen, <MID SETTING> screen and <HIGH SETTING> screen on the PAINT page), the BLACK GAMMA is set to "+3".

Y GET: Function of indicating the brightness level of the center marker assigned.

DRS: The function of the dynamic range stretcher is allocated.
The function is allocated to compress the video level with high brightness and stretched the dynamic range.
The compression level is variable on the <KNEE LEVEL> screen on the PAINT page.

◆**Notes**

- Since the DRS function compresses the video levels of sections with high brightness, there are slight differences in color development when the DRS function is turned on/off.
- When the DRS function is turned on, the Knee function and the BLACK GAMMA function are not available.

ASSIST: The function to turn on or off the assigned focus assist indication.

◆**Note**

When the ASSIST button is turned on, a graph is displayed on the viewfinder and the bottom right of the LCD monitor. Adjust the focus ring on the lens so that the graph comes further right.

C.TEMP: The function to switch to the mode that allows the JOG dial button to change the assigned color temperature. It is useful for intentionally changing the color temperature after adjusting the white balance. To change the color temperature, press the user button with this assigned function, and then press the JOG dial button. The color temperature indicated on the viewfinder display is highlighted and starts blinking, indicating that the color temperature can be changed. While the indication is blinking, the JOG dial button can be turned to change the color temperature. At this time, the value set for the position (PRST, A, or B) to which the WHITE BAL switch is set is also changed.

AUDIO CH1: Function of switching the input signal source for Audio Channel 1 assigned.
Pressing the button switches the input signal in the following order: FRONT → W.L. → REAR. Note that the AUDIO IN switch can also be used to change the input signal: later specification takes precedence.

AUDIO CH2: Function of switching the input signal source for Audio Channel 2 assigned.
Pressing the button switches the input signal in the following order: FRONT → W.L. → REAR. Note that the AUDIO IN switch can also be used to change the input signal: later specification takes precedence.

REC SW: Function of the REC START/STOP button assigned.

RET SW: Function of the RET button at the lens assigned.

PRE REC: PRE-RECORDING switch ON/switch OFF function assigned.

SLOT SEL: Function of switching the target P2 card among multiple cards assigned.

PC MODE: The function to turn on or off the assigned USB device or USB host mode. Switching between the USB device and USB host modes is set by selecting the PC MODE SELECT menu option in the SYSTEM MODE screen on the SYSTEM SETTING page.

◆**Note**

When the remote controller, AJ-RC10G (option), is connected and I.OVR or C.TEMP is assigned to the USER button on the side of the AJ-RC10G, operation of the jog dial button on the main unit is disabled.

Setting the Switchover of USER SW GAIN

AJ-HPX3000 allows three other modes to be used in addition to the L/M/H standard gain settings: the analog gain-up S.GAIN (super gain) mode to achieve a gain of 30 dB or more, the cumulative gain-up DS.GAIN (digital super gain) mode which uses progressive drive.

To select these functions, perform menu operations to open the <USER SW GAIN> screen from the CAM OPERATION page, select the S.GAIN item and DS.GAIN item, and preset the gain to be used for each item.

For instance, if the S.GAIN and DS.GAIN functions have been allocated to the USER MAIN button, USER1 button or USER2 button, the gain can be increased by using these buttons in combination with the USER buttons.

1) To increase the gain without increasing noise:

The DS.GAIN function is used.

2) To increase the normal analog gain:
(noise is increased)

Use the S.GAIN feature alone.

◆**Note**

Note that the accuracy of AUTO IRIS, White Balance, and Black Balance may be influenced by an increase in noise.

3) To achieve ultra-high sensitivity:

Use the S.GAIN function and DS.GAIN function in combination. However, exercise care during operation since image lag will become more conspicuous with moving subjects the more the gain is increased by using the DS.GAIN function.

When shooting moving subjects, keep the gain increase with the DS.GAIN function to under +12 dB ↑.

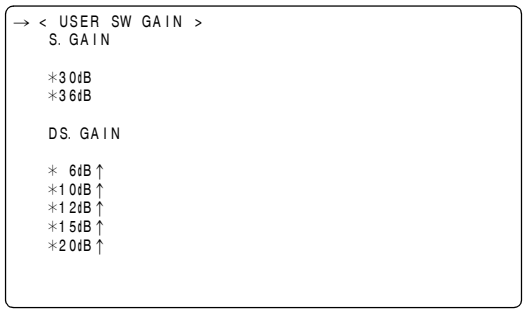

Settings Options and Usage

S.GAIN: An analog gain increase with an asterisk is one that is valid. One without an asterisk is invalid.

DS.GAIN: A cumulative gain increase with an asterisk is one that is valid. One without an asterisk is invalid.

Selecting Audio Input Signals and Adjusting Recording Levels

AJ-HPX3000 supports independent 4-channel sound recording in any recording format in HD (1080i) and SD (DVCPRO50 with 480i or 576i) modes.
When the AUDIO SELECT CH1/CH2 switch is positioned at [AUTO], the recording levels for Audio Channels 1 and 2 are automatically adjusted. To manually adjust the recording levels, position the switch at [MAN]. Note that the recording levels for Audio Channels 3 and 4 are selected through a menu option.

◆Notes

- Even in HD mode (1080i), 4-channel sound is recoded on P2 cards.
- When SDI input signals or signals input through the DVCPRO connector are recorded, the settings above are overridden; audio signals from the SDI IN or DVCPRO connector are always recorded.

Selecting Audio Input Signals

The input signals to be recorded on Audio Channels 1, 2, 3, and 4 are selected with the AUDIO IN switch. For more information, see [Audio (input) Function Section] (page 16).

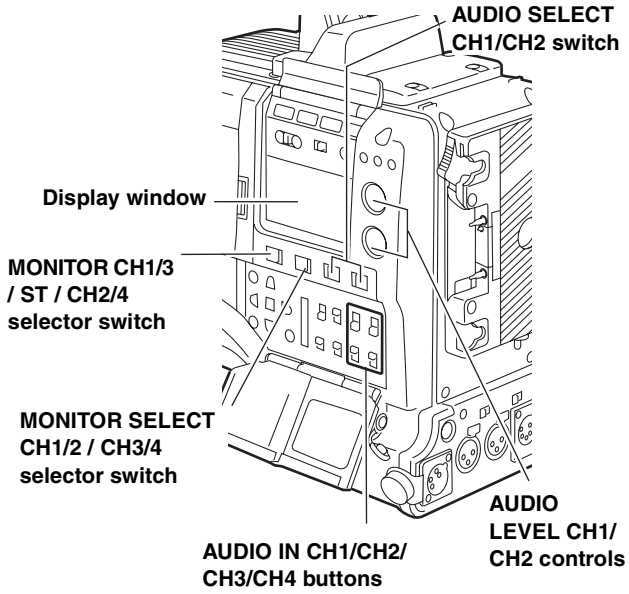

◆Notes

- Audio Channels 1 and 2 always receive the signals selected with the AUDIO IN CH1 and CH2 switches.
- Four-channel-recorded audio signals are SDI-output as they are.

Specific audio settings are performed through the <MIC/AUDIO1> and <MIC/AUDIO2> screens, which are accessible from the MAIN OPERATION page.
For more information, see [MAIN OPERATION] (page 181).

```
→ < MIC/AUDIO1 >

   FRONT VR CH1          :OFF
   FRONT VR CH2          :OFF
   MIC LOWCUT CH1        :OFF
   MIC LOWCUT CH2        :OFF
   MIC LOWCUT CH3        :OFF
   MIC LOWCUT CH4        :OFF
   LIMITER CH1           :OFF
   LIMITER CH2           :OFF
   AUTO LEVEL CH3        :ON
   AUTO LEVEL CH4        :ON
   TEST TONE             :NORMAL
```

```
→ < MIC/AUDIO2 >

   FRONT MIC POWER       :ON
   REAR MIC POWER        :ON
   MONITOR SELECT        :STEREO
   FRONT MIC LEVEL       :-40dB
   REAR MIC CH1 LEVEL    :-60dB
   REAR MIC CH2 LEVEL    :-60dB
   REAR LINE IN LVL      :+4dB
   AUDIO OUT LVL         :+4dB
   HEADROOM              :20dB
   WIRELESS WARN         :OFF
```

Adjusting Recording Levels

To adjust the recording levels for Audio Channels 1 and 2, follow the steps below.

1. Position the MONITOR SELECT CH1/2 / CH3/4-selector switch at CH1/2 so that the audio level meter on the display window will provide CH1 and CH2 indications. Ensure that the channel indications displayed in the window are 1 and 2.
   Whether to enable or disable the FRONT AUDIO LEVEL control must be preset through menu options FRONT VR CH1 and FRONT VR CH2. Note that this control is factory-disabled.
   The menu options are found in the MIC/AUDIO1 screen, which is accessible from the MAIN OPERATION page.
2. Position the AUDIO SELECT CH1/CH2 switch at [MAN].
3. While checking the audio channel level meter in the display window or the audio level meter in the viewfinder, adjust the AUDIO LEVEL CH1/CH2 control.
   Note that if the level exceeds the top bar (0 dB), the word OVER illuminates to show that the input level is excessive. The adjustment made in such a way that the maximum level will not reach the 0 dB bar.

Audio level meter on the display window

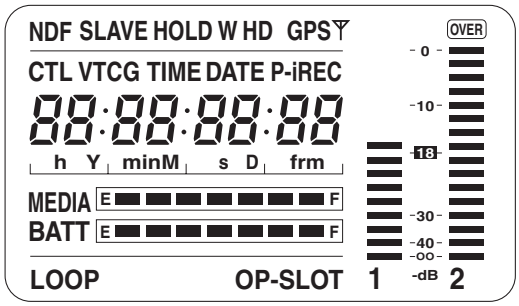

Audio level meter in the viewfinder

When operating the unit without a sound recordist, it is recommended that the FRONT AUDIO LEVEL control should be used to adjust the audio level.
In advance, check the level meter in the viewfinder screen and use the FRONT AUDIO LEVEL control to adjust the appropriate audio channel so that no excessive audio signals will be admitted.

Selecting Function for the FRONT AUDIO LEVEL Control

This function enables the recording level to be adjusted using the FRONT AUDIO LEVEL control.
To select this function, perform menu operations to open the <MIC/AUDIO> screen from the MAIN OPERATION page, and set whether to enable or disable the FRONT AUDIO LEVEL controls for the system selected as the input signals using the FRONT VR CH1 and FRONT VR CH2 items.

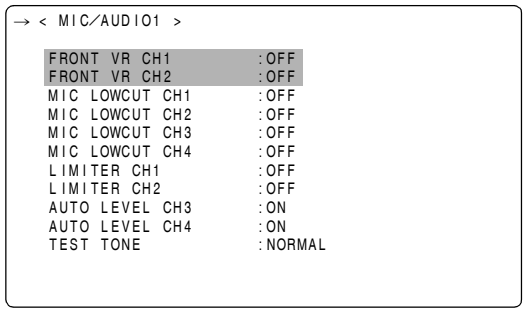

CH3 and CH4 Recording Levels

The following table shows the effects on the recording level for Audio Channels 3 and 4 that depend on the settings and input levels specified through the menu options AUTO LEVEL CH3 and AUTO LEVEL CH4. Note that the recording level cannot be adjusted manually.
These options are found in the <MIC/AUDIO1> screen, which is accessible from the MAIN OPERATION page.

AUTO LEVEL CH3/CH4	Input level	
	LINE	MIC
ON	AGC ON	AGC ON
OFF	AGC/LIMITER OFF	LIMITER ON

Setting Time Data

AJ-HPX3000 supports time codes, user bits, date, and time (real time) data, which are recorded as data for the sub-code area, VIDEO AUX area, and clip metadata files. It also includes a CTL counter and camera ID.

Description of time data

Time code

The TCG switch can be used to switch between Rec run and free run.

Free run: The time code always advances even when the power is turned off. It can be handled as time. It can be slaved to the time code input through the TC IN or DVCPRO connector.

Rec run: The time code is recorded as sequential values regenerated as the time code for a clip recorded on a P2 card.

User bits

The camera-recorder separately includes two types of user bits: one (UB) is recorded in the sub-code area and the other (VITC UB) in the VIDEO AUX area. Each user bits can be recorded as any of the following: a user defined value, time, date, same value as the time code, frame rate information for camera shooting, externally input value (through the TC IN or DVCPRO connector), and value regenerated as the user bits recorded in a clip on a P2 card.

The camera-recorder includes only one user defined value. If user defined values are selected for both the UB and VITC UB, then the same value is used.

Types of UB can be selected in UB MODE and types of VITCUB can be selected in VITC UB, respectively. However, in the following cases, these are fixed to the frame rate information of the editing machines (editing software for PCs).

- For recoding 24P/24PA in 1080i or 480i mode, VITC UB is fixed to frame rate information.
- In Native mode, VITC UB is fixed to frame rate information.

Date and time (real time)

The built-in clock maintains the date and time. When the GPS unit AJ-GPS910G is installed, the built-in clock is corrected with accurate date and time information from the GPS. This clock is used to store the date and time while the power is turned off and as the time for the user bits and date data, as well as the reference for file generation times during clip recording, which determine the sorting order of thumbnails and the order of playback. It is also used to generate clip metadata and UMIDs (Unique Material Identifiers) in the VIDEO AUX area.

CTL counter

The CTL counter will measure total recording time after resetting in the recording operation. On the other hand, this value is the count time and sets the start point of a clip that can be played back. This can be used to find the current playback position.

Camera ID

The camera ID can be set with 10 characters ×3 lines, which can be superimposed on the color bar video. It can be also superimposed along with date and time data.

Recording time code and user bits

The number of frames for TC varies with the settings for the input signal, system mode, and camera mode as follows.

REC SIGNAL	SYSTEM MODE	Recording frame MODE*10	TC in sub-code area	TC in VIDEO AUX area (VITC)	No. of frames of TC during recording and presetting	No. of frames of the output TC	No. of frames of the displayed TC	UB in sub-code area	UB in VIDEO AUX area (VITC UB)
CAM	1080-59.94i	60i, 30P (Over 60i)	As per the TC mode*4	As per the TC mode*4	30	30	30/24 switchable	As per the UB mode*6	As per the VITC UB mode
		24P (Over 60i) 24PA (Over 60i)	Always non-drop frame*5	Always non-drop frame*5					Always frame rate information*3
		30PN (Native)	As per the TC mode*4	As per the TC mode*4			30	As per the UB mode*6*9	Always frame rate information*8
		24PN (Native)	Always non-drop frame*5	Always non-drop frame*5	24		Recording: 24 fixed Playback: 30/24 switchable		
	1080-50i	50i, 25P (Over 50i)	—*4	—*4	25	25	25	As per the UB mode*6	As per the VITC UB mode
		25PN (Native)						As per the UB mode*6*9	Always frame rate information*8
	480-59.94i	60i 30P (Over 60i)	As per the TC mode*4	As per the TC mode*4	30	30	30/24 switchable	As per the UB mode*6	As per the VITC UB mode
		24P (Over 60i) 24PA (Over 60i)	Always non-drop frame*5	Always non-drop frame*5					Always frame rate information*3
	576-50i	50i, 25P (Over 50i)	—*4	—*4	25	25	25	As per the UB mode*6	As per the VITC UB mode
SDI*1 or VIDEO	1080-59.94i 480-59.94i	—	As per the TC mode*4	As per the TC mode*4	30	30	30/24 switchable	As per the UB mode*6	As per the VITC UB mode
	1080-50i 576-50i		—*4	—*4	25	25	25		
1394	1080-59.94i 480-59.94i	— (AVC-Intra is not selectable.)	As per the TC mode*2	Regardless of the setting, TC in the VIDEO AUX area input through the DVCPRO connector is recorded.	30	30	30/24 switchable	As per the UB mode*7	Regardless of the setting, TC in the UB area input through the DVCPRO connector is recorded.
	1080-50i 576-50i		—*2		25	25	25		

*1 It will not be slaved to a TC or UB value that is input in the SDI IN connector.

*2 Can be slaved to values input through the DVCPRO connector but not to the TC for TC IN connector.

*3 If the option menu FRAME RATE UB is set to MENU, then recording is performed as per the UB or VITC UB mode. If this is the case, however, edit tools (e.g. PC edit software) cannot record the required information.

*4 For free run, the time code is slaved to the time code input through the TC IN connector.

*5 For free run, the time code is slaved to the time code input through the TC IN connector if it is a non-drop frame.

*6 When the option UB MODE is set to EXT, then the bits are slaved to the user bits input through the TC IN connector.

*7 If the option UB MODE is set to EXT, then the bits are slaved to the user bits input through the DVCPRO connector.

*8 Regardless of the menu settings, frame rate information is always recorded. During playback, the information is output after being converted into pull-down frame rate information.

*9 When the UB MODE is set to [FRM.RATE], the pull-down frame rate information read out from the UB in the VAUX area is output during playback.

*10 For details on this item, refer to [Recording formats and output connector signal formats] (page 44)

Setting of the user bits

The user bits (UB) to be recorded in the sub-code area are selected through the menu option UB MODE. The user bits (VITC UB) to be recorded in the VIDEO AUX area are selected through the menu option VITC UB MODE.

USER (UB MODE only)
The included user value is recorded. A user value is input through the display window. For more information about how to input a user value, see[Inputting a user value] (page 57). The recorded user value is retained even if the power is turned off.

TIME
The time kept by the built-in clock is recorded.

DATE
The hour digits for date and time kept by the built-in clock are recorded.

EXT (UB MODE only)
The user bits value input through the TC IN connector is recorded. When the menu option REC SIGNAL is set to 1394, then the value is slaved to the user bits value from the DVCPRO connector. The included user's value will also be this input value.

TCG
The time code value is recorded.

FRM.RATE
The frame rate information for camera shooting is recorded. For more information, see [Frame rate information recorded in user bits] (page 58).

REGEN
The user bits last recorded on the current target P2 card is read and recorded as is.

USER/EXT（VITC UB MODE only）
The included user's value is recorded as the user bits for the VIDEO AUX area. It is the same value as the user bits indicated when the option UB MODE is set to USER or EXT.

Inputting a user value

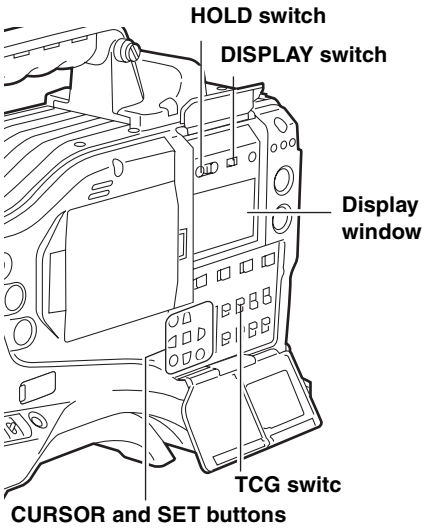

1 Position the DISPLAY switch at [UB].

2 Position the TCG switch at [SET].
When the left digit starts blinking you can change the value.

3 Use CURSOR buttons to set the user bits.

▷ **button:** Shifts the target (blinking) digit to the right.
◁ **button:** Shifts the target (blinking) digit to the left.
△ **button:** Advances the blinking number by one digit.
▽ **button:** Winds back the blinking number by one digit.

4 Position the TCG at [F-RUN] or [R-RUN].

5 Go to the <TC/UB> screen from the MAIN OPERATION page, and set the menu option UB MODE to "USER".

◆Notes
- When the TCG switch is positioned at [SET], thumbnails cannot be manipulated.
- To confirm VICT UB, press the HOLD switch to display VTCG on the display window.

Retaining the user bits

The data set for the user bits are automatically saved and retained even if the camera-recorder is turned off.

Frame rate information recorded in user bits

If video information to be recorded based on the frame rate set through the menu option CAMERA MODE is recorded in the user bits, it can be edited with editing tools (e.g. PC editing software). In 1080i and SD mode, the frame rate information for the user bits recorded in the VIDEO AUX area are used.

Frame rate information

The frame rate and video pull-down menu are linked to the time code and user bits as follows:

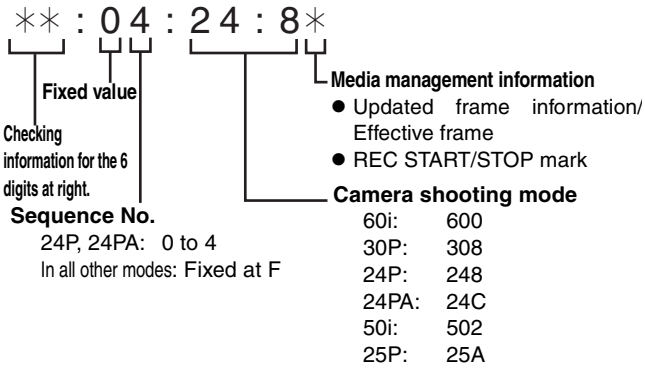

Frame rate: 24P Over 60i (2:3)

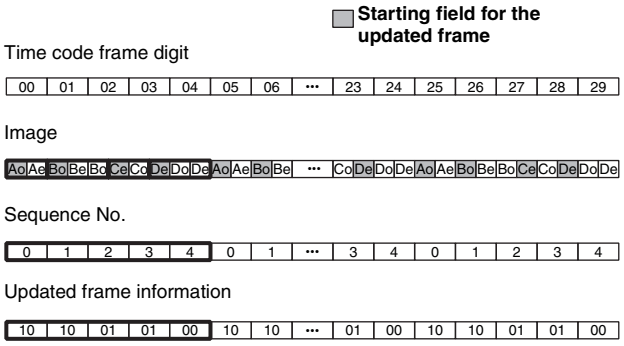

Frame rate: 24PA Over 60i (2:3:3:2)

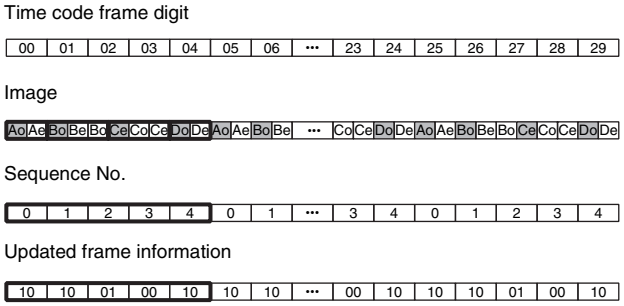

Frame rate: 30P Over 60i (2:2)
25P Over 50i (2:2)

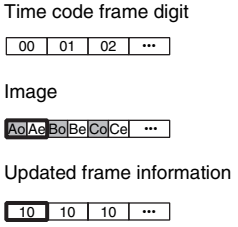

The frame rate information of user bits in Native recording is as follows.

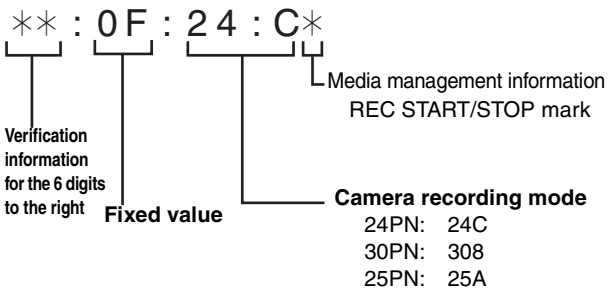

◆Note

During playback of clips recorded in Native recording frame rate information of user bits is converted according to the image pull down and then output.

Example: **Recording**

∗∗ : 0F : 24 : C∗

Playback

∗∗ : 0# : 24 : 8∗

# indicates sequence Nos. 0 to 4.

Setting the Internal Clock's Date and Time

1 Position the DISPLAY switch at [UB].

2 Press the HOLD button to display a date in the display window.

3 Position the TCG switch at [SET].

4 Use the CURSOR and SET buttons to set the year, month and day (Y/M/D).
Note that any later than 2030 cannot be set.

- ▷ **button:** Shifts the target (blinking) digit to the right.
- ◁ **button:** Shifts the target (blinking) digit to the left.
- △ **button:** Advances the blinking number by one digit.
- ▽ **button:** Winds back the blinking number by one digit.

5 Press the HOLD button to display a time in the display window.

6 Use the CURSOR buttons to set the hour, minute and second (h/min/s).

7 Position the TCG switch at [F-RUN] or [R-RUN]. The internal clock starts at the moment the switch position is changed.

8 Press the HOLD button to display a time zone (time difference between local time and Greenwich Mean Time in the display window.

9 Position the TCG switch at [SET].

10 Use the △ and ▽ buttons to set the desired hours and minutes ahead of (no sign) or behind (– sign) the Greenwich Mean Time.

Example: If the local time is five hours behind Greenwich Mean Time,
set the time zone to "5:00 –".

The time zone is always recorded, together with the date and time, as metadata.
See the table at right to set the time zone according to your local time.

11 Position the TCG switch at [F-RUN] or [R-RUN] to accept the time zone.

◆**Notes**

- When using the camera-recorder for the first time, be sure to perform this setting beforehand. Do not change the setting during use of the camera-recorder.
- When the TCG switch is positioned at [SET], thumbnails cannot be manipulated.

Time difference	Area	Time difference	Area
00:00	Greenwich	–12:00	Kwajalein
+ 00:30		–11:30	
+ 01:00	Central Europe	–11:00	Midway Island
+ 01:30		–10:30	
+ 02:00	Eastern Europe	–10:00	Hawaii
+ 02:30		–09:30	Marquesas Islands
+ 03:00	Moscow	–09:00	Alaska
+ 03:30	Tehran	–08:30	
+ 04:00	Abu Dhabi	–08:00	Los Angeles
+ 04:30	Kabul	–07:30	
+ 05:00	Islamabad	–07:00	Denver
+ 05:30	Bombay	–06:30	
+ 06:00	Dacca	–06:00	Chicago
+ 06:30	Rangoon	–05:30	
+ 07:00	Bangkok	–05:00	New York
+ 07:30		–04:30	
+ 08:00	Beijing	–04:00	Halifax
+ 08:30		–03:30	Newfoundland Island
+ 09:00	Tokyo	–03:00	Buenos Aires
+ 09:30	Darwin	–02:30	
+ 10:00	Guam	–02:00	Mid-Atlantic
+ 10:30	Lord Howe Island	–01:30	
+ 11:00	Solomon Islands	–01:00	Azores Islands
+ 11:30	Norfolk Island	–00:30	
+ 12:00	New Zealand		
+ 12:45	Chatham Islands		
+ 13:00			

◆**Notes**

- In Step ***4***, if the TCG switch is positioned at [F-RUN] or [R-RUN], this also activate the internal clock.
  To cancel date, time and time zone settings in process, hold down the SET button and position the TCG switch at [F-RUN] or [R-RUN].
- Clock accuracy fluctuates between about ± 30 seconds per month when the power is turned off. If more accurate timekeeping is required, check the time when the power is turned on and, if necessary, reset the clock.
  When the GPS unit AJ-GPS910G is installed, and if it successfully receives time information, the internal clock keeps accurate (local) time based on the received time (Greenwich Mean Time) and the time zone. If the date and time differ from the actual local time, the time zone may not be set correctly. Check again, to see if the time zone is set correctly. (The date and time need not be set again.)
- The built-in clock operates for several years on a lithium battery built into the camera-recorder. When the lithium battery is exhausted, the viewfinder indicates the message "BACKUP BATT EMPTY" when the power is turned on. For more information, see [Maintenance] (page 144).

Setting the Time Code

1 Position the DISPLAY switch at [TC].

2 Position the TCG switch at [SET].

3 Set the menu option TC MODE to “DF” or “NDF”. “DF” steps the time code in drop frame mode, and “NDF” steps it in non-drop frame mode. However, the camera always operates in “NDF” for 24P, 24PA and 24PN (Native) modes.
The menu option TC MODE can be found in the <TC/UB> screen, which is accessible from the MAIN OPERATION page.

◆**Note**
Switching between DF and NDF is operative only when the system frequency of the camera-recorder is set to 59.94 Hz.

4 Use the CURSOR buttons to set the time code.
The time code setting range extends from 00:00:00:00 to 23:59:59:29 (59.94 Hz), 23:59:59:23 (24PN) or to 23:59:59:24 (50 Hz).

▷ **button:** Shifts the target (blinking) digit to the right.
◁ **button:** Shifts the target (blinking) digit to the left.
△ **button:** Advances the blinking number by one digit.
▽ **button:** Winds back the blinking number by one digit.

5 Change the position of the TCG switch.
[F-RUN] steps the time code in free run mode, and [R-RUN] set it in recording run mode.

◆**Notes**
- When the unit is in the 24P or 24PA mode, time code settings are adjusted to the five-frame unit. For 24PN (Native) mode, it is adjusted for counting by the four-frame unit. The time code cannot be set when recording in the 24P, 24PA, and 24PN (Native) formats.
- When the TCG switch is positioned at [SET], thumbnails cannot be manipulated.

Regeneration of Time Code

When the TGC switch is positioned to R-RUN, the time code recorded on the last frame of the last recorded clip (with the latest recording date) on the P2 card is read, and this time code can be used again.
When the menu option FIRST REC TC is set to REGEN and a P2 card is removed or inserted or the target recording card is changed with the USER button for the SLOT SEL function, the same time code is added to the last recorded clip on the target P2 card. When there is no recorded clip, the time code is recorded on the new recording target P2 card, from the value generated by the TC generator built into the camera-recorder.
The menu option FIRST TC REC can be found in the <TC/UB> screen, which is accessible from the MAIN OPERATION page.

Regeneration function using REC REVIEW

If the menu option FIRST REC TC is set to PRESET, if the time code has been set or reset, or if the time code has been switched from free run to Rec run, it is possible to regenerate the time code as the last time code of a clip recorded on the P2 card.
This action requires you to preset the RET SW menu option on the SW MODE screen to R. REVIEW and the REC REVIEW REGEN menu option on the TC/UB screen to ON.

1 Make sure the P2 card to record the data. To regenerate the time code of the last recorded clip when more than one P2 card is inserted, press the Thumbnail button to open the thumbnail screen.

2 Be sure a P2 card is inserted for recording the clip displayed at the end of the screen, and then switch the slot with the USER button assigned the SLOT SEL function so that data will be recorded on the P2 card.

3 Press the RET button on the lens. The message “TC REGEN” is displayed in the viewfinder. During the next recording, the time code of the last recorded clip on the card will be regenerated.

◆**Notes**
- When a card with recorded data is changed, the time code of the last recorded clip on the changed P2 card will be regenerated.
- This function is disabled during recording or free-run.

Time code function during battery replacement

Even during battery replacement, the backup mechanism functions, allowing the camera-recorder to operate continuously.
If SYSTEM MODE is changed, a free-run time code may shift. After turning on the power again, confirm the time code and reset if necessary.

◆**Note**
When the POWER switch has been switched ON → OFF → ON, the backup accuracy of the time code in free run mode is about ±2 frames.

Externally Locking the Time Code

The unit's internal time code generator can be locked to an external generator. In addition, the external time code generator can be locked to the unit's internal generator.

Example of connections for external locking

As the figure shows, connect both the reference video signal and reference time code.

Example 1: When locking onto an external signal

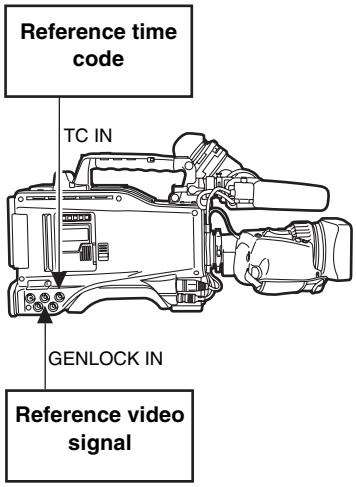

◆Note

In place of the HD Y reference signal, composite video signals can be input as the reference video signal.

Example 2: When connecting a multiple number of units and using one of them as the reference unit

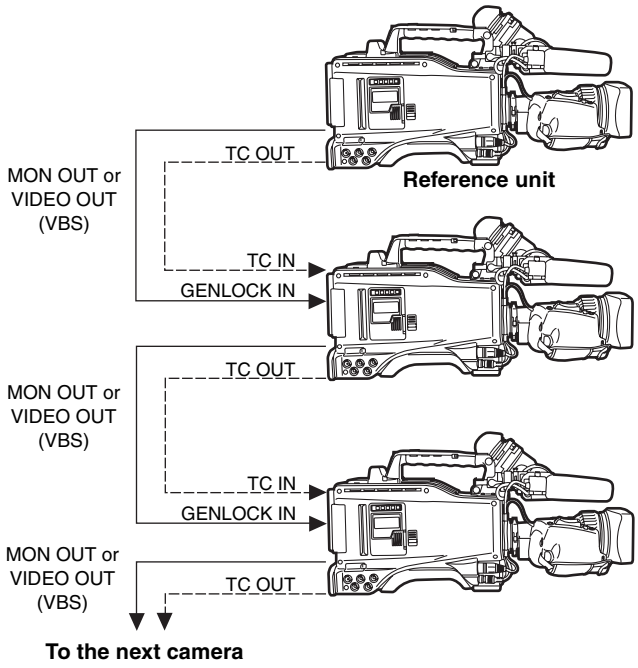

◆Note

The system can be configured with multiple units by opening the <GENLOCK> screen from the SYSTEM SETTING page and setting the GL PHASE item to the connector using menu operations.

The phase of the time code can correspond to either the HDY output signals of the MON OUT connector or VBS output signals of the VIDEO OUT and MON OUT connector.

However, the same value should commonly be set to the GL PHASE for all cameras. If different values coexist in the system, the shooting timing may not correspond to each other.

Reference video signal	Setting of GL PHASE
MON OUT (VBS) or VIDEO OUT (VBS)	COMPOSIT

Setting of GL PHASE

Item	Variable range	Remarks
GL PHASE	HD SDI COMPOSIT	For selecting the output signals that lock phases to the signals that are input in the GENLOCK IN connector. **HD SDI:** For locking the HD SDI signals to the GENLOCK input. For the down converter output signals, the start position of the video delays by about 90 lines. **COMPOSIT:** For locking the down converter output signals to the GENLOCK input. For the HD SDI output signals, the start position of the video gains by about 90 lines.

In the unit, there is a video signal delay in the camera, which is required or the process of converting video images taken with the image-shooting element from the progressive signals to the interlace signals. Since time is required for making the 2:3 pull-down from the 24P frame, there is a video signal delay in the camera. When recording from a device that can record images without a delay and the unit is connected in parallel, it is necessary to synchronize the time code. To set this timing, open the <TC UB> screen from the VTR MENU page and set it in the TC VIDEO SYNCRO item.
Set by referring to the connection example.

Setting of the TC VIDEO SYNCRO item

Item	Variable range	Remarks
TC VIDEO SYNCRO	0 1 2 3	For setting to correct the time code according to the delay of video signals. **0:** Do not correct. **1:** To delay the time code to be input according to the timing of the video images. **2:** To forward the time code to be output according to the timing of the video images. **3:** To delay the time code to be input and forward the time code to be output, respectively, according to the timing of the video images.

Example 3:

When the unit and an external device are locked to the external time code generator, which is connected externally, and when simultaneous recording is made by using the TC OUT output signals.

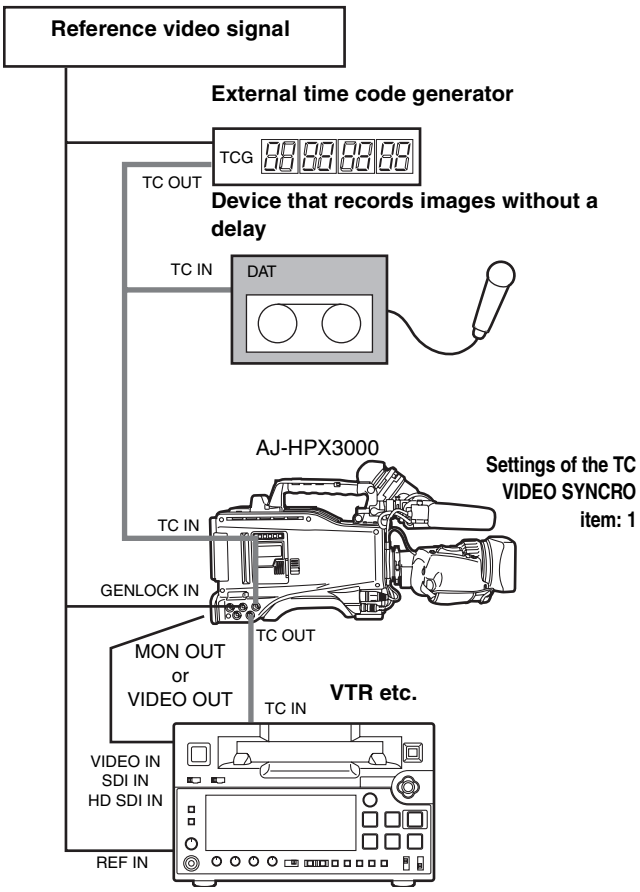

Example 4:

When the unit and an external device are locked to the external time code generator and when several units of the camera are connected in a cascade configuration.

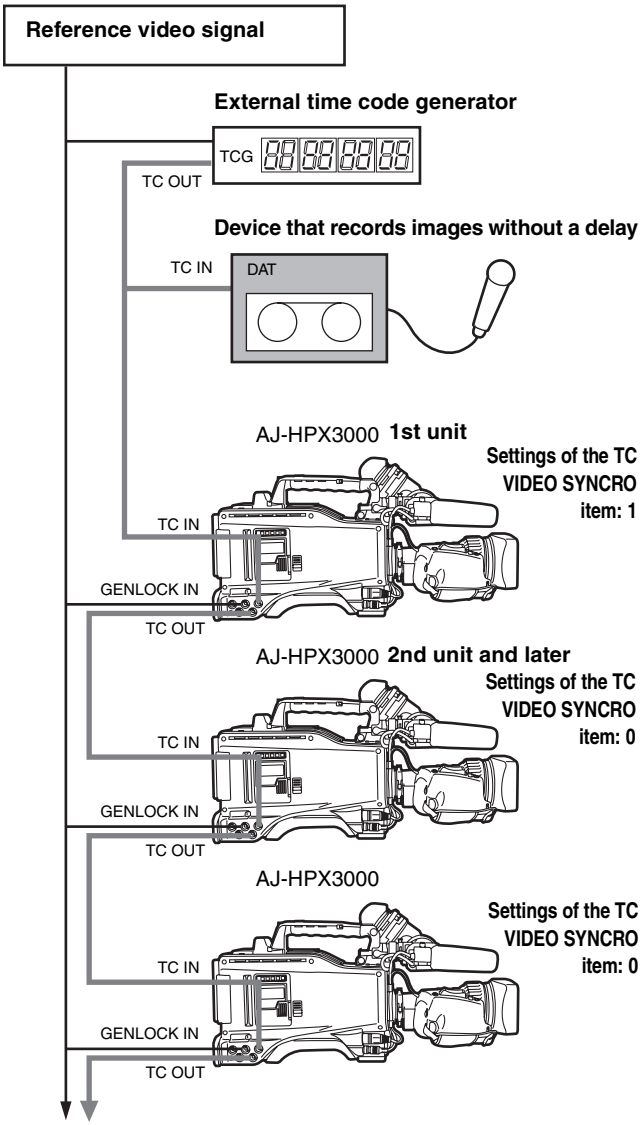

Example 5:

When an external device is locked to the time code generator of the unit.

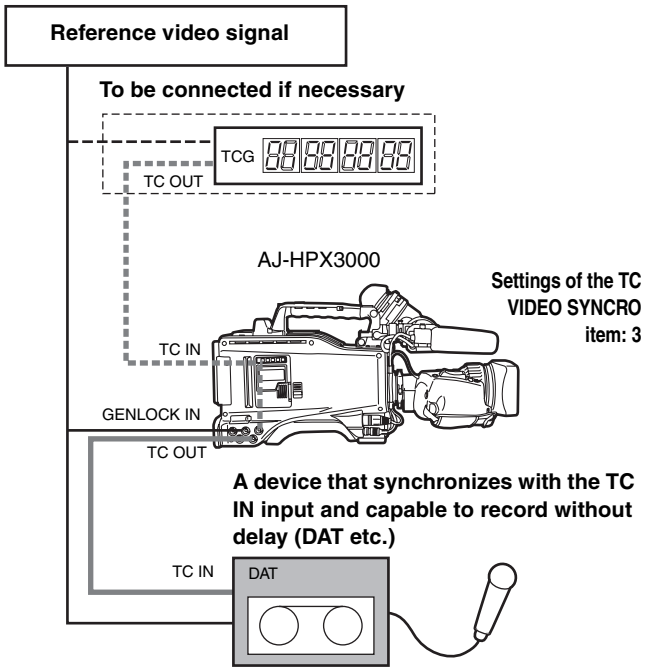

Example 6:

When an external device is locked to the time code generator of camera-recorder, which is connected in a cascade configuration.

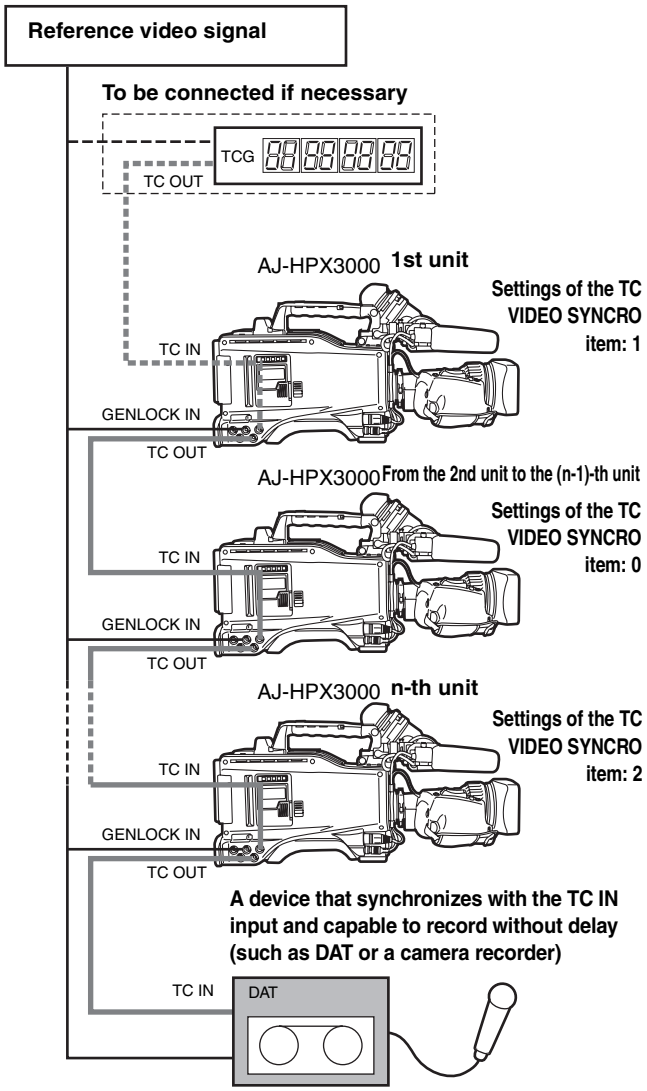

To externally lock the time code

Follow the steps below.

1. Turn on the POWER switch.
2. Position the TCG switch at [F-RUN].
3. Position the DISPLAY switch at [TC].
4. Set the menu option GENLOCK to “EXT”.
   This option can be found in the <GENLOCK> screen, which is accessible from the SYSTEM SETTING page.
5. Supply a phase-relationship reference time code (that conforms to the time code requirements) and reference video signals to the TC IN and GENLOCK IN connectors, respectively.

Now the built-in time code generator is locked with the reference time code.
From about 10 seconds after locking the time code generator stays locked even if the supply of external reference time code is discontinued.

◆Notes

- When the time code generator is externally locked, the time code instantly becomes locked with the external time code, and the counter displays the external time code value. Do not put the unit in recording mode before the sync generator stabilises.
- Be sure to enter the non-drop-frame time code to externally lock the time code in the 24P, 24PA or 24PN (Native) mode. Externally locking the drop-frame time code is not permitted.
  Video quality may be degraded momentarily while externally locking to adjust the 5-frame cycle. This is not abnormal.
- While recording data in the 24P, 24PA, or Native modes, it is impossible to lock the time code externally. Lock it before recording.
  When the unit PRE REC MODE is set to [ON] in these modes, corrupt images or stopped time codes may be recorded if the time code is switched from REC RUN to FREE RUN immediately before recording or when using slave lock.
- When “1394” is selected for the menu option REC SIGNAL, it is not possible to synchronize with the time code entered via TC IN connector.
  The menu option REC SIGNAL is found in the SYSTEM MODE screen on the SYSTEM SETTING page.

Setting the user bits when the time code is externally locked

When the TCG switch is positioned to F-RUN, only the time code is locked to an external time code. To lock the user bits to an externally input value, the UB MODE and VITC UB MODE menu options must be set to EXT and USER/EXIT, respectively.
The menu option UB MODE and VITC UB MODE can be found in the <TC/UB> screen, which is accessible from the MAIN OPERATION page.

To unlock the externally locked time code

Discontinue external time code supply, then position the TCG switch at [R-RUN].

Cautions in switching the power source from battery to external power supply

Connect the DC IN socket with the external power supply before removing the battery pack, in order to keep the time code generator energised. If the battery pack is removed first, there is no guarantee that the time code will stay externally locked.

External synchronisation of the camera when the time code is externally locked

When the time code is externally locked, the reference video signals input through the GENLOCK IN connector gen-lock the camera.

◆Notes

- To externally lock the unit, as the master device, with more than one unit, the mode must be the same as that of the camera. Note that in a system using both interlaced and progressive scanning, there may be breaks in the video and time code.
- When using the MON OUT or VIDEO OUT connector to output reference signals, position the OUTPUT SEL switch on the side panel at [CAM].

Superimpose of time codes

To display the time code in the viewfinder or the LCD monitor when recording or during playback, set TC in <VF INDICATOR2> to [TCG], [TCR], or [TCG/TCR].
To display the time code indication on the MONITOR OUT or VIDEO OUT outputs, set MONI OUT CHARA in <OUTPUT SEL> to [ON] and the VIDEO OUT CHARACTER switch to [ON].
To display the time code while the color bar is displayed, set TC ON COLOR BAR in <VF INDICATOR2> to [ON].

Providing an ID to the Camera

The camera ID is specified through the <CAMERA ID> screen.
The ID can include up to 10 alphanumeric characters, symbols, and/or spaces.

◆Note

When the settings menu is displayed, outputting color bar signals does not indicate the camera ID.

1 Go to the <CAMERA ID> screen from the CAM OPERATION page.

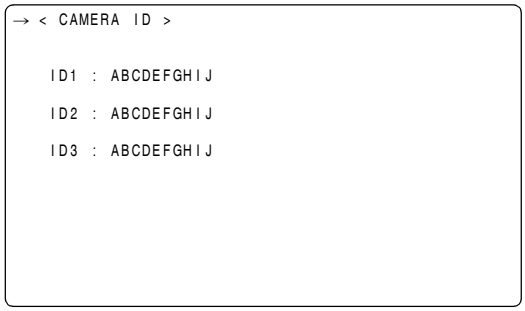

2 Turn the JOG dial button to move the cursor to options [ID1:] - [ID3:].

3 Press the JOG dial button. The cursor moves to the ID entry area, allowing you to enter an ID.

4 Turn the JOG dial button until a desired character appears. The characters that appear are switched in the following order:

Space: □
↓
Alphabetical characters: A to Z
↓
Numerals: 0 to 9
↓
Symbols: ', >, <, /, -

5 Press the JOG dial button to accept a desired character.

6 Turn the JOG dial button to move cursor to the next digit (clockwise), and repeat Steps ***4*** - ***5*** to set characters.
To change an input character, turn the JOG dial button to move the arrow (cursor) to the appropriate character and carry out steps ***4*** and ***5***.

7 When all the characters are set, turn the JOG dial button to move the cursor to [:].

8 Pressing the JOG dial button brings the cursor back to the options [ID1:] - [ID3:].

9 To exit the menu, press the MENU button.

◆Notes

- When the menu option CAMERA ID is set to “BAR”, the camera ID is recorded together with color bar signals.
  This menu option is accessible from the <VF INDICATOR1> screen, which is accessible from the VF page.
- The ID POSITION menu option can be used to select a position where the camera ID is superimposed on the color bar. The ID POSITION option can be accessed through the VF INDICATOR 1 screen on the VF page.
- When the TIME/DATE menu option is set to ON, the camera ID along with the data and time information are superimposed on the color bar. The TIME/DATE option can be accessed through the VF INDICATOR 1 screen on the VF page.
- When the TC ON COLOR BAR is turned ON, the time code is displayed when the color bar is output, but the time code is not recorded. Open TC ON COLOR BAR from the VF INDICATOR 3 screen on the VF page.

Setting UMID Information

The unit supports UMID metadata. You need to specify as UMID information the country where you live (using up to three characters), organisation or company (up to four characters) and user name (up to four characters). For the country name, you must use abbreviations prescribed in the ISO3166 Country Code*1.
Here are some examples of the correct method for specifying a user name:

***1 Examples: China CHN**
U.S.A. USA
Canada CAN
Japan JPN

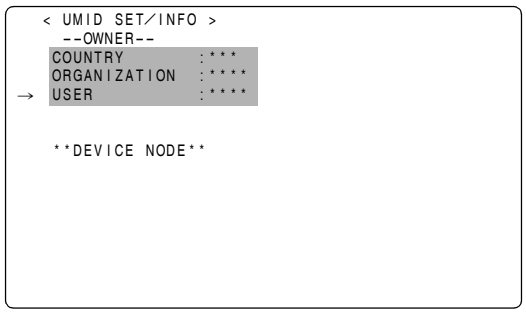

1 Go to the <UMID SET/ INFO> screen from the MAIN OPERATION page.

2 Turn the JOG dial button to move the cursor to the option [USER].

3 Press the JOG dial button. The cursor moves to the user entry area, allowing you to enter a user name.

4 Turn the JOG dial button until a desired character appears. The characters appear in the following order:

Space: □
↓
Alphabetical characters: A to Z
↓
Numerals: 0 to 9
↓
Symbols: ', >, <, /, -

◆ **Note**
The COUNTRY entry can only include alphabetical characters and spaces.

5 Press the JOG dial button to accept a desired character.

6 Turn the JOG dial button to move the cursor to the next digit (clockwise), and repeat Steps ***4*** to ***5*** to set characters.
To change an input character, go back to step ***3***.

7 When the last character is set, press the JOG dial button to bring the cursor back to the option [USER].

8 To exit the menu, press the MENU button.

CTL Count Setting and Display

By setting the DISPLAY switch to “CTL”, CTL count is displayed on the time count indication of the LCD display window.
The CTL count is displayed in ±12 hours with non-drop-frame.
The playback order of clips recorded on a P2 card is not linear as for VTRs. It is organized according to thumbnail operations or exchanging P2 cards, and the priority of recorded clips will be altered. Therefore, different CTL counts are displayed for recording mode and playback mode, respectively.

CTL count for recording mode (recording CTL)

Recording CTL count is displayed during recording mode (REC, REC/PAUSE, STOP and REC REVIEW), and the count continues from the end point of the previous recording. Recording CTL count is retained even if the power is turned off. When the power is next turned on, the count continues from the previous value.

◆ Notes

- If the RESET button is pressed while the recording CTL count is being displayed, only the recording CTL count is reset. Note that reset is disabled during the REC REVIEW operation.
- 24 frames are counted in the 24PN (Native) mode.

CTL count for the playback mode (playback CTL)

During playback mode (PLAY, FF, REW, PLAY/PAUSE), playback CTL count is displayed.
Whenever the playback order of clips is altered (clips are sorted by shooting dates), previous playback CTL count is disabled. The first frame of the first clip is used as a reference value for recalculation, and the new playback CTL count is displayed.

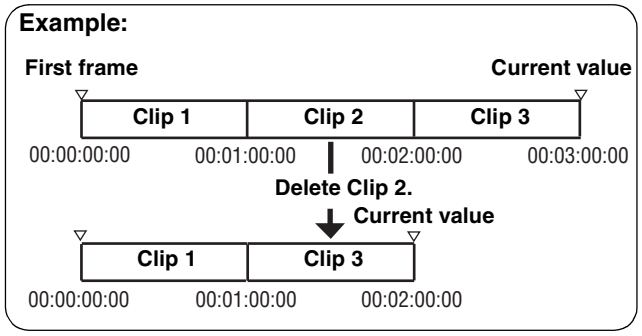

The playback order of clips is altered when either of the following occurs:

- Clips are deleted, copied or restored, or the P2 card is formatted.
- The thumbnail display is switched (for more information, see [Switching the Thumbnail Display] (page 117)).
- A P2 card is inserted or removed.

The reference value (value of the first frame of the first clip) is changed when either of the following occurs:

- The power is turned on, the first frame becomes 0.
- When the playback CTL count is reset, the current playback position is set as 0, and the previous reference value becomes a negative value.

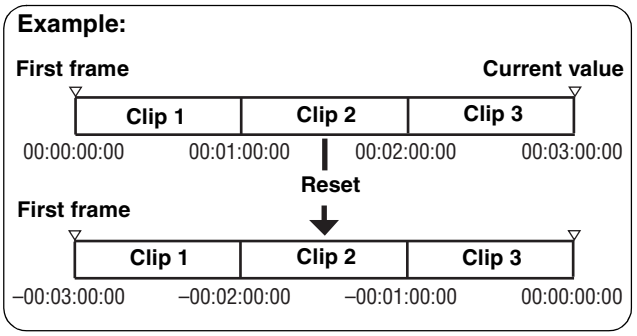

◆ Notes

- If the RESET button is pressed while the playback CTL count is being displayed, only the playback CTL count is reset.
- For playback in 24PN (Native) mode, 30 frames are counted in accordance with the pull-down images.

Viewfinder Screen Status Displays

In addition to video images, the viewfinder displays lamps and text that indicate the settings and operating status of the unit, together with messages, a center marker, a safety zone marker and the camera ID.

Lamps in the Viewfinder Screen

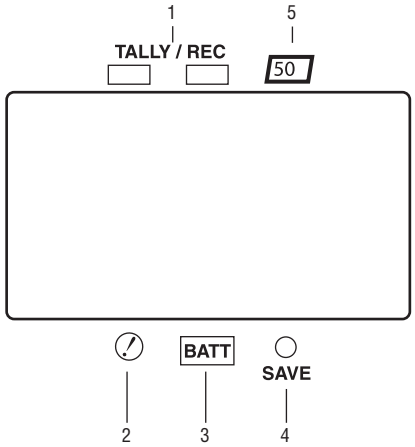

The above viewfinder is the AJ-VF20WBP (for further information on your optional viewfinder model, see the relevant instruction manual).

1. TALLY/REC (recording) Lamp

This lamp stays illuminated during recording, and starts blinking if any abnormal action occurs.

For more information, see [Warning System] (page 149).

2. Abnormal Operating Status Warning Lamp

This lamp comes on when the unit is in any of the abnormal operating statuses specified through the menu sub-option !LED.

For statuses that activate the lamp, see the options in the <!LED> screen in [!LED] (page 175).

3. BATT (battery) Lamp

This lamp starts blinking a few minutes before the battery charge starts to run out, and stays illuminated after the battery is completely flat. The battery should be replaced before it is nearly flat, so that operation will not be interrupted.

For more information, see [Warning System] (page 149).

4. SAVE Lamp

In the normal setting:

The lamp stays on when the SAVE switch is positioned at [ON] and the output of video and audio is power-saved.

When the menu option SAVE LED is set to "P2 CARD":

The lamp starts blinking when the P2 card remaining free space is getting low.

The menu option SAVE LED can be found in the <VF INDICATOR3>, which is accessible from the VF page.

5. 50 (50-Mbps recording/playback) Lamp (In using the SD viewfinder)

This lamp stays illuminated when the unit is set to the DVCPRO50 (50 Mbps) format, and when playback is being performed in the DVCPRO50 format.

Note that the lamp is factory-disabled. For more information, see the relevant section of the menu option 50M INDICATOR in [VF DISPLAY] (page 172).

Mode Check Screen Displays (MODE CHECK button function)

The viewfinder can display a screen that allows you to check the settings and status of the unit.

Each press of the MODE CHECK button switches the screen as follows:

STATUS screen → !LED screen → FUNCTION screen → AUDIO screen → CAC screen → No indication

Each screen is displayed for about three seconds. A press of the MODE CHECK button switches the current screen.

Whether or not to display each screen is specified through the <MODE CHECK IND> screen, which is accessible from the VF page.

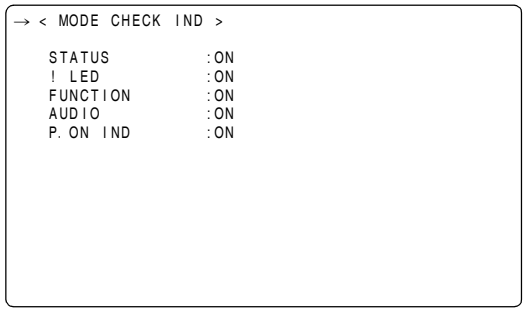

Selecting Viewfinder Display Information

To select the information items you want to have displayed in the viewfinder screen, go to the <VF INDICATOR1>, <VF INDICATOR2> and <VF INDICATOR3> screens from the VF page, and turn on or off the appropriate options, or specify desired values.

For directions on setting the options, see [Setting Menu Options] (page 157).

```
→ < VF INDICATOR1 >

   EXTENDER      :ON
   SHUTTER       :ON
   FILTER        :ON
   WHITE         :ON
   GAIN          :ON
   IRIS          :S+IRIS
   CAMERA ID     :BAR
   ID POSITION   :UPPER L
   DATE/TIME     :OFF
   ZOOM LVL      :ON
   COLOR TEMP    :ON
   SYSTEM MODE   :ON
   CAMERA MODE   :ON
```

```
→ < VF INDICATOR2 >

   CAC                :OFF
   FILM REC MODE      :OFF
```

```
→ < VF INDICATOR3 >

   P2CARD REMAIN      :ON
   BATTERY            :ON
   AUDIO LVL          :ON
   TC ON COLOR BAR    :OFF
   TC                 :OFF
   SYSTEM INFO        :NORMAL
   SAVE LED           :SAVE
   REC STATUS         :OFF
   PROXY REC          :OFF
```

Viewfinder Status Indication Layout

The indications are arranged as illustrated below.

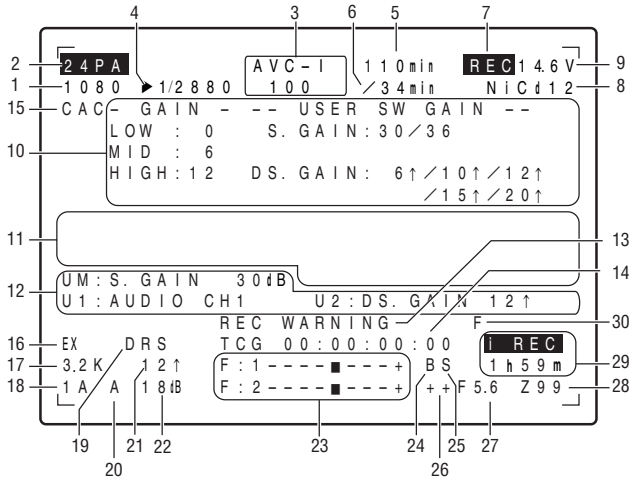

For more information, see the following pages:

Information Item	Indication	Status
1. System mode	 1080 480 576	This indicates the mode that the unit operates in. 1080 interlace mode 480 interlace mode 576 interlace mode
2. Camera mode	 60i 30P 24P 24PA 50i 25P	This indicates the video system when signals output from CCD are recorded on a P2 card or output as video signals. 1080-59.94i or 480-59.94i 1080-29.97P or 480-29.97P 1080-23.98P or 480-23.98P (2-3 Pull-down) 1080-23.98P or 480-23.98P (2-3-3-2 Pull-down) 1080-50i or 576-50i 1080-25P or 576-25P
3. REC mode	 DVCPRO HD DVCPRO50 AVC-I 100 AVC-I 50	This indicates the recording mode.
4. Shutter speed/mode	►1/∗∗.∗/►∗∗∗.0d 1/60 (1/100) - 1/2000, HALF	This indicates that the shutter speed is set to SYNCHRO SCAN. This indicates that a fixed shutter speed has been set.
5. P2 card remaining free space	∗∗∗min END WP LOOP INFO P2 ∗/∗	The indication “∗∗∗min” stays illuminated under normal conditions or blinks when the remaining level is near zero. When the card space is used up, “END” blinks. The P2 card is write-protected. The camera-recorder is in LOOP REC mode. When loop recording cannot be performed, for example because the P2 card has no free space, the indication blinks. P2 card being recognised. Total free space/capacities of the P2 cards (when MODE CHECK is being performed). ◆**Note** When the menu option P2 CARD REMAIN is set to “ONE CARD”, the number of the P2 card slot that contains the target card is indicated, together with the remaining space. For more information, see [P2 Card Remaining Free Space/capacity Indication] (page 75).
6. P2 card remaining free space (MODE CHECK)	1∗∗∗min	The number of the P2 card slot that contains the target card and the remaining free space (when MODE CHECK is being performed) are indicated. In LOOP REC mode, the minimum guaranteed recording time (Refer to [Loop Recording] (page 37)) is indicated. This indication also appears when the target P2 card has been switched with a user button.
7. Camera-recorder REC indication	REC	When an external device is controlled through the 1394 connection (when the 1394 option is set to BOTH),the recording status of the camera-recorder is displayed using characters. The indication stays illuminated during recording. This is displayed when the menu option REC TALLY of the OPTION MODE is set to “CHAR”. This can also be displayed during the recording using the unit alone. This is displayed when the menu option REC STATUS of the VF INDICATOR3 is set to “ON”.
8. Battery type (MODE CHECK)	PRO14 - AC ADPT	Battery type, selected through a menu option. “AC ADPT” indicates when an external DC power supply has been input.
9. Battery remaining level/voltage	∗∗.∗V ∗∗∗% EMP MAX	Battery remaining level in tenths of a volt The remaining battery level is indicated in percentage. This indicates that the battery level is empty. This indicates the battery is fully charged.

Information Item	Indication	Status
10. MODE CHECK Indication Area (STATUS: Master gain, USER SW GAIN)	LOW/MID/HIGH –3 to 30 S.GAIN 30/36 DS.GAIN 6↑/10↑/12↑/15↑/20↑	Value set for the master gain Example: LOW: 0 Gain value to which S.GAIN and DS.GAIN are assigned
(Cause of !LED illumination: displayed full-screen) ● Indications selected through the menu option !LED are marked with [!]. ● Indications which may activate the !LED are marked with [▮].	GAIN (0 dB) GAIN (–3 dB) DS.GAIN SHUTTER WHITE PRE. EXTENDER B.GAMMA MATRIX COLOR COR. FILTER	Gain status Gain status DS. GAIN value Shutter status White balance status Extender status (EX2 or OFF) BLACK GAMMA status (ON or OFF) MATRIX status (A, B, or OFF) Color correction status (ON or OFF) Filter status
(FUNCTION: VIDEO OUT)	OUTPUT: MEM/CAM/OFF TYPE: HD-SDI/SD-SDI/VBS CHAR: ON/OFF	Position of OUTPUT SEL switch. Setting for menu option VIDEO OUT switch. Position of VIDEO OUT CHARACTER switch.
(FUNCTION: MON OUT)	OUTPUT: MEM/CAM/OFF SELECT: VBS/VF/Y CHAR: ON/OFF	Position of OUTPUT SEL switch. Signal mode set through the MONITOR OUT menu option. The setting for menu option MONITOR OUT CHAR. The options MONITOR OUT and MONITOR OUT CHAR can be found in the OUTPUT SEL screen, which is accessible from the SYSTEM SETTING page.
(FUNCTION: P2CARD STATUS)	TOTAL SLOT1/SLOT2/SLOT3/SLOT4/SLOT5 OP-SLOT	Total remaining free space/capacities of the P2 cards loaded in P2 Card Slots 1 - 5. Remaining free space/capacity of each card. The numbers denote the P2 card slot numbers. The card status is indicated as: ACTIVE/ACCESSING/INFO READING/FULL/PROTECTED/ NOT SUPPORTED/FORMAT ERROR/NO CARD/PROXY For details of statuses, see [P2 CARD ACCESS LED and status of P2 cards] (page 31). Indicates optional slot status. The card status is indicated as: PROXY/NO CARD/NOT SUPPORTED
(AUDIO: Enabling or disabling the FRONT AUDIO LEVEL control)	CH1: ON/OFF CH2: ON/OFF	If the FRONT AUDIO LEVEL control is in effect for Channel 1, then ON is indicated. If not, OFF is indicated. If the FRONT AUDIO LEVEL control is in effect for Channel 2, then ON is indicated. If not, OFF is indicated.
(AUDIO: Phantom power status for the microphone)	FRONT: ON/OFF REAR: ON/OFF	Phantom power status of the front microphone Phantom power status of the rear microphone For more information, see [MIC/AUDIO2] (page 185).
(AUDIO: Input signal and level for each channel)	FRONT/W.L./REAR CH1/2/3/4	Input signal and level for each channel
(CAS information: Operating status of CAC)	CAC CONT: STOP CAC MODE: AUTO/MANUAL --CONNECT LENS TYPE-- ******** --SELECT FILE TYPE-- ******** --CAC WARNING--	The operating status of CAC is displayed. Displays the operating mode for CAC AUTO: CAC files are selected automatically. MANUAL: A CAC file number is selected from the menu. Displays the lens ID of the connected digital lens. Displays the file name of the currently operated CAC. However, when the MAINTENANCE page and CAC CONTROL on the CAC ADJ screen is set to OFF, the CAC file currently selected is displayed. Indicates that the CAC operation is in stop state.

Information Item	Indication	Status
11. Camera Warning and Report Area (related to AWB, ABB and switch settings)	AWB A ACTIVE	AWB being performed on Ch A.
	AWB B ACTIVE	AWB being performed on Ch B.
	AWB A OK ∗.∗K	AWB successful on Ch A.
	AWB B OK ∗.∗K	AWB successful on Ch B.
	AWB BREAK ∗.∗K	AWB action aborted by user.
	AWB NG	AWB action failed. The second line indicates the status.
	COLOR TEMP LOW	Color temperature too low.
	COLOR TEMP HIGH	Color temperature too high.
	LEVEL OVER	Brightness too high.
	LOW LIGHT	Brightness too low.
	TIME OVER	Action timed-out.
	ATW MODE	This is indicated when AWB cannot be executed since ATW is being operated.
	AWB PRESET ∗.∗K	AWB cannot be performed because the AWB switch is position at PRE or the super gain is enabled.
	CHECK FILTER	Make sure the FILTER control is positioned correctly.
	ABB ACTIVE	ABB being performed.
	ABB OK	ABB action successful.
	ABB BREAK	ABB action aborted by user.
	ABB NG	ABB action failed.
	B-SHD READY	Black shading accepted (by holding down the ABB switch during ABB adjustment).
	B-SHD ACTIVE	Black shading being adjusted.
	B-SHD OK	Black shading adjustment successful.
	B-SHD BREAK	Black shading adjustment aborted by user.
	B-SHD NG	Black shading adjustment failed.
(Switch changeover indication)	WHITE: # ∗.∗K	The WHITE BAL switch has been switched. # is replaced with A, B or PRST. When [A] and [B] are set to “VAR”, then it is indicated as VAR ∗.∗ K. When [B] is assigned ATW, then it is indicated as ATW MODE.
	AUTO KNEE: ON/OFF	Displayed when the AUTO KNEE switch is assigned to ON or OFF and the AUTO KNEE switch is turned ON/OFF.
	DRS: ON/OFF	Displayed when the AUTO KNEE switch is assigned to DRS and the AUTO KNEE switch is turned ON/OFF.
	GAIN:∗∗dB	Gain has been switched with the GAIN selector switch or a user button.
	SS: 1/∗∗∗∗ or ∗∗∗.∗deg	When the shutter speed has been switched, the shutter speed is indicated.
	SS: ► 1/∗∗∗∗ or ►∗∗∗.0d	Shutter speed is in SYNCRO SCAN mode.
	CC: ∗∗∗∗ ∗∗K	This appears when the CC filter setting has been selected.
	ND: ∗	This appears when the ND filter setting has been selected.
	EXTENDER: ON/OFF	Lens extender has been turned on or off.
	IRIS: ∗∗ F ∗.∗	Indicated when the iris override correction value is to be changed.
(Low light warning)	LOW LIGHT	Brightness too low.
(Y GET value)	∗∗∗.∗%	With the Y GET ON setting, the output brightness level near the center marker is displayed as “%.”
(MARKER indication)	MKR: A/B/OFF	Current marker type
12. User button functions UM: USER MAIN button U1: USER1 button U2: USER2 button	INH	User buttons disabled.
	S.GAIN ∗∗dB/OFF	Selected S.GAIN
	DS.GAIN ∗∗↑/OFF	Selected DS.GAIN
	S.IRIS ON/OFF	Whether S.IRIS is ON or OFF.
	I.OVR ON/OFF	Iris override can be set (the IRIS OVERRIDE setting is ON).
	S.BLK –∗∗/OFF	Status of SUPER BLACK (ON or OFF). When it is ON, the set value is also indicated.
	B.GAMMA ON/OFF	Status of BLACK GAMMA (shade correction for the black level): ON or OFF
	AUDIO CH1	Input signal to be recorded on Audio Channel 1 has been switched.
	AUDIO CH2	Input signal to be recorded on Audio Channel 2 has been switched.
	REC SW	USER button acts as REC switch.
	Y GET ON	Y GET function ON.
	RET SW	USER button acts as RET switch.
	SLOT SEL	Switch that changes the target card is set.
	PRE REC	Indicates that PRE-RECORDING mode has been switched ON or OFF.
	USB HOST/DEVICE/OFF	USB action status has been switched.
	DRS ON/OFF	Indicates whether the dynamic range stretcher function is ON or OFF.
	ASSIST ON/OFF	Indicates whether the focus assist function is ON or OFF.
	C.TEMP	Indicates the mode for changing the color temperature with the JOG dial button is ON or OFF.

Information Item	Indication	Status
13. System information and warnings	SYSTEM ERROR-∗∗	Something abnormal is happening to the internal computer communications or reference signal. No further recording or playback can be performed. ∗∗ is replaced with an error code.For more information, see [Error Codes] (page 152).
	TURN POWER OFF	P2 card has been removed while being accessed (recorded, played back, or formatted), and subsequent operation is disabled.
	CARD ERR ∗	An error has occurred while recording data to or playing data from a P2 card. In the actual indication the ∗ is replaced by the slot number of the P2 card that triggered the error.
	REC WARNING	Something abnormal is happening to video and/or audio being recorded.
	BACKUP BATT EMPTY	Backup battery needs replacing.
	FAN STOP	The fan is locked and halted.
	WIRELESS-RF	RF signal from the wireless receiver is degraded.
	EOM	P2 card has no free space.
	BOS	Playback position is at the start of all the clips.
	EOS	Playback position is at the end of all the clips.
	CANNOT REC	The P2 card is not recordable. Detailed information is provided on the FUNCTION screen of MODE CHECK. See the relevant section of the MODE CHECK indication area.
	CANNOT PLAY	Clip cannot be played back perhaps because no P2 card is loaded, or the P2 card contains no clips.
	COMM ERROR	Displayed when disconnection between microcomputers continues for a specified period or longer.
	TEXT MEMO	Text memo has been added.
	TEXT MEMO INVALID	Text memo has not been successfully added.
	MARK ON/OFF	Shot mark been added or deleted. For information on shot marks, see [Shot Mark Function] (page 42).
	SHOT MARK INVALID	This is displayed when shot marks cannot be added.
	UPDATING	Clip information is being updated. Playback operation disabled.
	USB DEVICE	AJ-HPX3000 is in USB DEVICE mode. When communication is disabled, the indication blinks.
	USB HOST	Indicates that the camera-recorder is set to the USB HOST mode. When the external hard disk is not successfully recognized, then the indication blinks.
	THUMBNAIL OPEN	Thumbnail is being manipulated.
	1394 INITIAL ERROR	Displayed when the connection of the DVCPRO connector is abnormal.
	PROXY REC P2&SD	Displayed when proxy recording on either the P2 card or the SD memory card starts (when AJ-YAX800G is attached, the PROXY REC item on the VF INDICATOR3 screen is turned on).
	PROXY REC P2	Displayed when proxy recording on the P2 card starts (when AJ-YAX800G is attached, the PROXY REC item on the VF INDICATOR3 screen is turned on).
	NEAR END (SD)	When the remaining free space on the SD Memory card drops below one minute during proxy recording, the message is displayed (when AJ-YAX800G is attached).
	EOM (SD)	Displayed when full capacity is reached during proxy recording on the SD memory card (when AJ-YAX800G is attached).
	PROXY CARD ERROR	Displayed when proxy recording stops because of failure on either the video encoder card or the stream.(when AJ-YAX800G is attached).
	SD CARD WRITE ERR	Displayed when a failure occurs on the SD memory card during proxy recording, and only recording on the SD memory card stops.(when AJ-YAX800G is attached).
	CANNOT DISP IN VF	No return video, playback, or externally input video can be output to the viewfinder.
	TC REGEN	The RET button was pressed to regenerate the time code as the time code for the last clip recorded on a P2 card.
	SLOT SEL	This blinks while the recording slots of P2 cards are switched after pressing the USER switch where the SLOT SEL function is assigned.
	SLOT SEL INVALID	This is displayed if the recording slots of P2 cards cannot be switched when the USER switch where the SLOT SEL function is assigned is pressed.
	DIR NG CARD SLOT1/2/3/4/5	This is displayed when the recording starts or completes while a P2 card with an irregular directory arrangement is inserted or data are recorded after inserting an irregular P2 card.
	RUN DOWN CARD SLOT1/2/3/4/5	This is displayed when the recording starts or completes with an expired P2 card or when data are recorded after inserting an expired P2 card.
14. Time code indication	TCG 12:59:59:20	TCG (time code generator value)
	TCR 12:59:59:20	TCR (time code reader value)
	(V)UBG AB CD EF 00	UBG VUBG (User bits generator value)
	(V)UBR 12 34 56 78	UBR VUBR (User bits reader value)
	CTL –1:59:59:20	Displays CTL count.
15. Chromatic aberration compensation	CAC	Displayed when chromatic aberration compensation is activated
16. Extender	EX	Lens extender used.

Information Item	Indication	Status
17. Color temperature	∗.∗K	Color temperature assigned to A, B, and PRST of the WHITE BAL switch (this is a value stored at AWB performance or a value set through the menu option). The indication is not provided in ATW mode.
18. Filter position	1 - 4 A - D –	This indicates the position of the ND filter. This indicates the position of the CC filter. This indicates that the filter has not been set to a proper position.
19. Dynamic range stretcher mode	DRS	This appears when the video level of a part with high brightness is compressed, and the function stretching the dynamic range is selected.
20. WHITE BAL switch position	A B P	WHITE BAL switch positioned at [A]. WHITE BAL switch positioned at [B]. WHITE BAL switch positioned at [PRST].
21. Stored gain indication	6↑/10↑/12↑/15↑/20↑	Storage gain (DS.GAIN) value (when active)
22. Gain value	∗∗dB	Current gain value.
23. Audio input channel and level meter	- - - - ■- - - - + F W R	Selected channel together with its audio level. AUDIO IN switch is positioned at FRONT. AUDIO IN switch is positioned at W.L.(WIRELESS) AUDIO IN switch is positioned at REAR.
24. Super black ON	B	Super black ON.
25. Super iris ON	S	Super iris ON.
26. Iris override indication	+ + + – – – (No indication)	Correction phase of the iris override (when active) + + : On the open side by 1 +: On the open side by 0.5 – – : On the closed side by 1 –: On the closed side by 0.5 No indication : Standard status
27. Iris, F value	NC OPEN F1.7 - F16 CLOSE	Lens cable is not connected. Lens iris is at maximum. Lens iris value Lens iris closed. ◆**Note** These indications are provided when the lens is capable of indicating the iris value. When the iris is being overridden, they blink.
28. Zoom indication	Z00 - Z99	Zoom degree is indicated. This indication is not provided for a lens that does not return the zoom position, even if the indication is set to ON.
29. INTERVAL REC/PRE-RECORDING indication/ SD memory card remaining free space	**i** **i REC** (blink) **i REC** (blink) ∗∗h∗∗m/∗∗s P-REC (blink) **SD** ∗∗h ∗∗m END	Displayed before and after operation during INTERVAL REC mode. Displayed during INTERVAL REC operation. Displays the pause time before the next recording during INTERVAL REC. Indicated while pre-recorded video and audio are being recorded on the P2 card. If the USER switch is set to perform the PRE-RECORDING function, either “P-REC OFF” or the specified duration “1s - 8s” is displayed when the PRE-RECORDING mode is switched by pressing the USER switch. If a video encoder card (AJ-YAX800G, optional accessory) is attached, the remaining free space on the SD Memory card will be displayed when the MODE CHECK button is pressed during proxy recording. [END] is displayed when there is no remaining free space.
30. FILM-REC	F	Displayed when FILM-REC is selected in GAMMA MODE SEL

P2 Card Remaining Free Space/capacity Indication

Status of unit	Recording status	Menu option P2 CARD REMAIN*1	5.P2 card remaining free space indication*2	6.P2 card remaining free space indication (during MODE CHECK)*2
Under normal conditions	Other than LOOP REC mode	TOTAL	The total remaining free space of all P2 cards loaded in the P2 card slots is indicated in minutes. Example: 30min	Not provided
		ONE CARD	The number of the P2 card slot holding the target P2 card, together with that card's remaining free space indicated in minutes. Example: 1 8min	Not provided
		OFF	Not provided	Not provided
	LOOP REC mode	TOTAL/ONE CARD	Indicated as [LOOP]	Not provided
		OFF	Not provided	Not provided
During MODE CHECK	Other than LOOP REC mode	TOTAL/ONE CARD/ OFF	The total remaining free space and capacities of all P2 cards loaded in the P2 card slots are indicated in minutes. Example: 20/40	The number of the P2 card slot holding the target P2 card, together with that card's remaining free space, indicated in minutes. Example: 1 8min
	LOOP REC mode		Indicated as [LOOP]	The minimum guaranteed recording time is indicated in minutes. Example: 7min

*1 The menu option P2CARD REMAIN can be found in the <VF INDICATOR3> screen, which is accessible from the VF page.

*2 If the remaining free space or memory capacity is 999 min or more, "999min" is displayed.

Indications Available in the Viewfinder Screen

	Selectable between on and off through menu options	Provided when the appropriate status is encountered.	Provided during MODE CHECK*1	Selectable	Provided during playback
1. System mode	○	–	●	○	–
2. Camera mode	○	–	●	○	–
3. REC mode	○	–	●	○	–
4. Shutter speed/mode	○	○	●	○	–
5. P2 card remaining free space	○	–	●	○	–
6. P2 card remaining free space (MODE CHECK)	–	–	●	○	–
7. Camera-recorder REC indication	○	○	–	○	–
8. Battery type (MODE CHECK)	–	–	●	○	–
9. Battery remaining level/voltage	○	–	●	○	–
10. MODE CHECK indication area	–	–	○	○	–
11. Camera warning and report area	–	○	○	○	–
12. User button functions	–	○	○	○	–
13. System information and warnings	○	○	●	○	○
14. Time code indication	○	–	●	○	○
15. Chromatic aberration compensation	○	○	●	○	–
16. Extender	○	○	●	○	–
17. Color temperature	○	○	●	○	–
18. Filter position	○	–	●	○	–
19. Dynamic range stretcher mode	○	–	●	○	–
20. WHITE BAL switch position	○	–	●	○	–
21. Stored gain indication	○	–	●	○	–
22. Gain value	○	–	●	○	–
23. Audio input channel and level meter	○	–	All 4ch input information	○	–
24. Super black ON	○	○	●	○	–
25. Super iris ON	○	○	●	○	–
26. Iris override indication	○	○	●	○	–
27. Iris, F value	○	–	●	○	–
28. Zoom indication	○	–	●	○	–
29. INTERVAL REC/PRE-RECORDING indication/SD memory card remaining free space	–	○	●	–	–
30. FILM REC	○	○	●	○	–

*1 ○: Not provided when the menu option STATUS is set to OFF, which can be found in the <MODE CHK IND> screen, accessible from the VF page.
●: Provided regardless of the menu option setting.

Display Modes and Setting Changes/adjustment Result Messages

The messages that appear on the viewfinder screen to indicate changes to settings and adjustment results may be limited, or set not to appear, through the menu option DISP MODE. This menu option can be found in the <VF DISPLAY> screen, which is accessible from the VF page. For directions on navigating the menu, see [Setting Menu Options] (page 157).

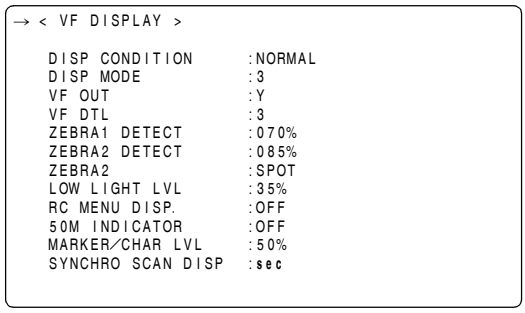

Message appears when:	Message	DISP MODE settings		
		1	2	3
CC/ND filter changed.	FILTER: n (n=1, 2, 3, 4)	○	○	●
Gain changed.	GAIN: n dB (n=–3, 0, 3, 6, 9, 12, 15, 18, 21, 24, 27, 30)	○	○	●
WHITE BAL switch re-positioned.	WHITE: n (n=A, B, PRE)	○	○	●
OUTPUT/AUTO KNEE switch positioned at [AUTO KNEE] or [OFF].	AUTO KNEE: ON (or OFF)	○	●	●
Shutter speed/mode changed.	SS: 1/100 (or 1/120, 1/250, 1/500, 1/1000, 1/2000, ►1/∗∗.∗ or ►∗∗∗.0d)	○	●	●
White balance adjusted (AWB performed).	Example: AWB A OK 3.2 K	○	●	●
Black balance adjusted (ABB performed).	Example: ABB OK	○	●	●
Extender selected.	Example: EXTENDER ON	○	○	●
USER button selected.	Example: UM: S.GAIN 30 dB	○	●	●
MARKER SELECT button selected.	Example: MKR: A	○	○	●
Iris being overridden.	Example: ++ F 5.6	○	●	●
The CAC lens is connected or removed.	Example: CAC LENS DATA INVALID	○	●	●

●: Message appears.
○: Message does not appear.

Setting the Marker Displays

The center, safety zone, safety zone area and frame markers may be set to ON or OFF, along with specifications of the marker types. To set and select markers, go to the VF MARKER screen from the VF page and select the appropriate options.
For directions on navigating the menu, see [Setting Menu Options] (page 157).

```
→ < VF MARKER >
                                                MKR:A
   TABLE          :A
   CENTER MARK    :1
   SAFETY MARK    :2
   SAFETY AREA    :90%
   FRAME MARK     :OFF
   FRAME SIG      :4:3
   FLAME LVL      :15
```

◆**Note**
The indication MKR:A at the upper right of the screen shows the current indication status. To view TABLE B, press the MARKER SELECT button. This changes the indication to MKR:B, allowing you to view the settings.

Marker Check Screen Displays (MARKER SELECT button function)

The viewfinder can display a screen that allows you to view the marker settings of the unit.
Pressing the MARKER SELECT button on the camera-recorder switches the marker indication as follows.

Marker A → Marker B → No marker

If the menu option FRAME SIG is set to 16:9 as the information of Marker A and 4:3 as the information of Marker B, then the 16:9 and 4:3 view angles can easily be checked with the button, as required.

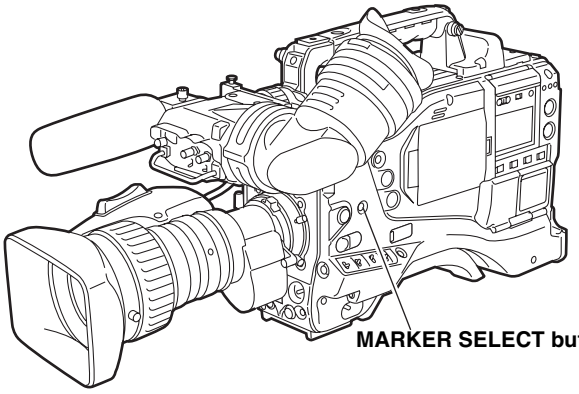

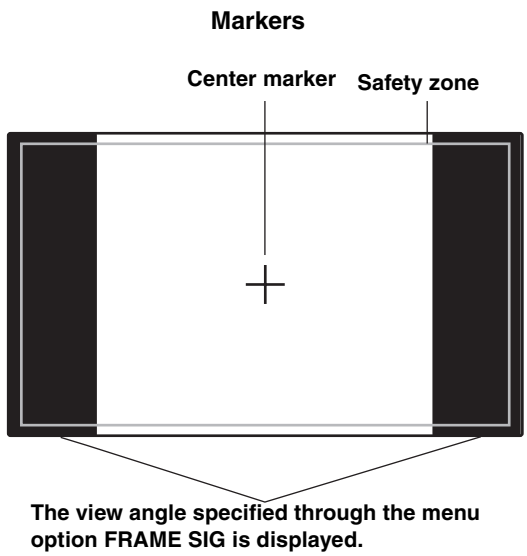

Checking Return Video Signal in the Viewfinder

The viewfinder displays the return video signal input to the GENLOCK IN connector while the RET button at the lens is held down.
To enable this capability, select CAM RET for the menu option RET SW. This option can be found in the <SW MODE> screen, which is accessible from the CAM OPERATION page.

```
  < SW MODE >

→ RET SW            :R. REVIEW
  S. BLK LVL        :-10
  AUTO KNEE SW      :ON
  SHD. ABB SW CTL   :ON
  COLOR BARS        :SMPTE
  S. GAIN OFF       :L/M/H
  DS. GAIN OFF      :DS. GAIN
  RC CHECK SW       :R. REVIEW
```

Adjusting and setting the LCD monitor

Using the LCD Monitor

1 Turn on the POWER switch of the unit.

2 Slide the OPEN button in the arrow ① direction to open the LCD monitor in the arrow ② direction.

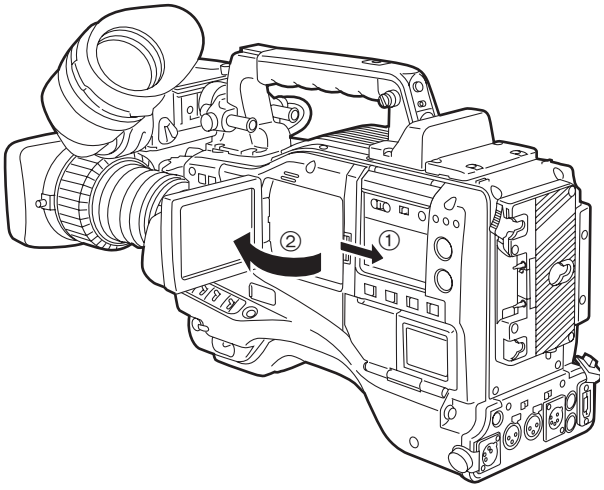

3 Adjust the angle of the LCD monitor for most convenient viewing.
The monitor can turn up to 180 degrees towards the lens and up to 90 degrees towards you.

◆Note

To prevent camera-recorder failure, do not allow undue force to be applied to the monitor (when it is open).

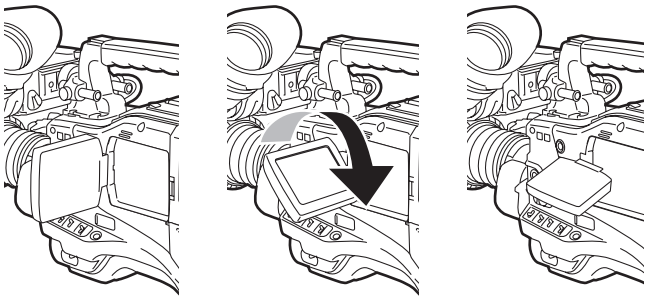

4 The options BRIGHTNESS, COLOR LEVEL, and CONTRAST show respectively the brightness, color level and contrast of the screen. These options can be found in the <LCD MONITOR> screen, which is accessible from the SYSTEM SETTING page.

```
→ <LCD MONITOR>

  BRIGHTNESS      :+0
  COLOR LEVEL     :+0
  CONTRAST        :+0
  BACKLIGHT       :NORMAL
  SELF SHOOT      :MIRROR
```

5 Through the menu option LCD MON CHAR, specify whether or not the LCD should display the same characters as the viewfinder.
This menu option can be found in the <OUTPUT SEL> screen, which is accessible from the SYSTEM SETTING page.

```
  <OUTPUT SEL>

  OUTPUT ITEM      :MENU ONLY
  MONITOR OUT      :VBS
  MONITOR OUT CHAR:OFF
→ LCD MON CHAR     :ON
  VF MODE          :MEM
  THUMBNAIL OUT    :OFF
```

◆Notes

- When closing the LCD monitor make sure that it is shut tight.
- In an environment with sudden temperature changes, condensation may form on the liquid crystal surface of the monitor. If this happens, wipe off the moisture with a soft, dry cloth.
- When the camera-recorder is very cold, the video image in the LCD monitor will appear slightly darker immediately after the power is turned on. Once the interior of the camera-recorder warms up, the LCD monitor delivers normal brightness.

Self-portrait Shooting

When shooting with the LCD display angled 180 degrees towards the lens, you can set the menu option SELF SHOOT to “MIRROR”, to horizontally flip the video image on the LCD display, and allow you to view a mirror image while shooting.
Note that only the video image on the LCD monitor is horizontally flipped, not the actual video being recorded.
The menu option SELF SHOOT can be found in the <LCD MONITOR> screen, which is accessible from the SYSTEM SETTING page.

◆Notes

- When the LCD monitor is angled 180 degrees towards you with the menu option SELF SHOOT to “MIRROR”, the LCD monitor does not provide the same status indication as the viewfinder, regardless of the setting for the menu option LCD MON CHAR.
- Return signals from the GENLOCK IN connector cannot be output to the LCD monitor.
- When the OUTPUT SEL switch is positioned to CAM in the HD mode, playback cannot be output to the LCD monitor. The HD viewfinder must be used to view playback.

Selection of video output signals

The unit employs the VIDEO OUT connector and the MON OUT connector as connectors for outputting video signals.

Settings of signals output from VIDEO OUT connector

The signal modes for outputting signals from the VIDEO OUT connector are switched with the VIDEO OUT switch.

HD SDI:
To output the HD SDI signals. When the camera-recorder is set to the SD mode, SD-SDI signals are output.

SD SDI:
To output the SD SDI signals. (Signals are down-converted in HD mode.)

VBS:
To output the composite video signals. (Signals are down-converted in HD mode.)

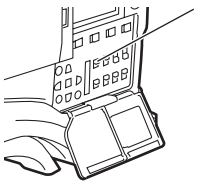

VIDEO OUT switch

The signals output from the MON OUT connector or VIDEO OUT connector are switched with the OUTPUT SEL switch.
However, the switching operation is not acknowledged during the recording operation.

MEM :
During EE, such as recording, video images taken by the camera are output. Meanwhile, signals on the P2 card are output during playback.

CAM :
The camera images are output at all times.

OFF :
No signal is output from the VIDEO OUT or MON OUT connector.

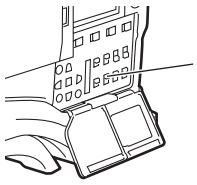

OUTPUT SEL switch

Set the characters to be superimposed on the signals output from the VIDEO OUT connector by using the VIDEO OUT CHARACTER switch and the OUTPUT ITEM item on the menu (<OUTPUT SEL> screen on the SYSTEM SETTING page).

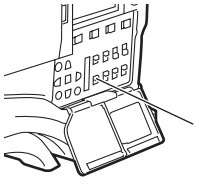

VIDEO OUT CHARACTER switch

Item	Variable range	Remarks
OUTPUT ITEM	MENU ONLY TC STATUS	Set the characters to be superimposed on the output signals from the VIDEO OUT connector. **MENU ONLY:** The menu screen is superimposed only when the menu is accessed. This normally displays nothing. **TC:** Time codes are superimposed (when the menu is accessed, the menu screen is superimposed.) **STATUS:** The characters that are the same as the characters superimposed in the viewfinder screen are superimposed. (When the menu is accessed, the menu screen is superimposed.)

Settings of signals output from MON OUT connector

The MON OUT connector outputs down-converted analog signals.
Set the video signals output from the MON OUT connector by using the MONITOR OUT item on the menu (<OUTPUT SEL> screen on the SYSTEM SETTING page).

Item	Variable range	Remarks
MONITOR OUT	VBS VF Y	Set video signals output from the MON OUT connector. **VBS:** Analog composite signals are output. **VF:** Y signals to be output to the viewfinder is output. The status screen is also superimposed. **Y:** Analog HD-Y signals are output.

Set to superimpose characters to the VBS signals output from the MON OUT connector in the MONITOR OUT CHARA item of the menu (<OUTPUT SEL> screen on the SYSTEM SETTING page).

Item	Variable range	Remarks
MONITOR OUT CHARA	ON OFF	Superimpose characters on the VBS output signals from the MON OUT connector. **ON:** To superimpose **OFF:** Not to superimpose ◆**Note** This does not link with the VIDEO OUT CHARACTER switch.

Settings of signals output from the SDI OUT/IN (OP) connector

The SDI OUT/IN (OP) connector outputs the same signal as the SDI signal output from the VIDEO OUT connector.
The output signals are switched depending on the settings of the signals output from the VIDEO OUT connector (refer to page 80).
However, when the VIDEO OUT switch is set to VBS, it depends on the settings of the SYSTEM MODE of the menu.

SYSTEM MODE	Position of the VIDEO OUT switch	SDI OUT/IN (OP) connector output signal
1080-59.94i 1080-50i	HD SDI	HD SDI
	SD SDI	SD SDI
	VBS	HD SDI
480-59.94i 576-50i	HD SDI	SD SDI
	SD SDI	SD SDI
	VBS	SD SDI

Handling data

Set data file configuration

The unit employs 6 sets for the file data area.

FACTORY data:
The area for storing factory settings
Data cannot be revised with menu operations.

USER data:
The area for storing the data set by menu operations
The FACTORY data is stored as the factory setting.

CURRENT data:
The area for storing the operating status of the unit
The set value in this area is revised by menu operations.

SCENE file:
Four sets of scene files are provided.

LENS file:
Eight sets of lens files are provided.

CAC file:
32 chromatic aberration compensation data area sets are provided.

For menu items that can be read from or stored in the respective areas, refer to [Menu] (page 155)

◆Notes

- For information about how to navigate through the menu for this section, see [Setting Menu Options] (page 157).
- Access the respective data settings files after switching the PC MODE to "OFF". If the respective data settings files are accessed when the unit is in USB DEVICE mode, an error may occur. The PC MODE can be operated from the <SYSTEM MODE> screen on the SYSTEM SETTING page.

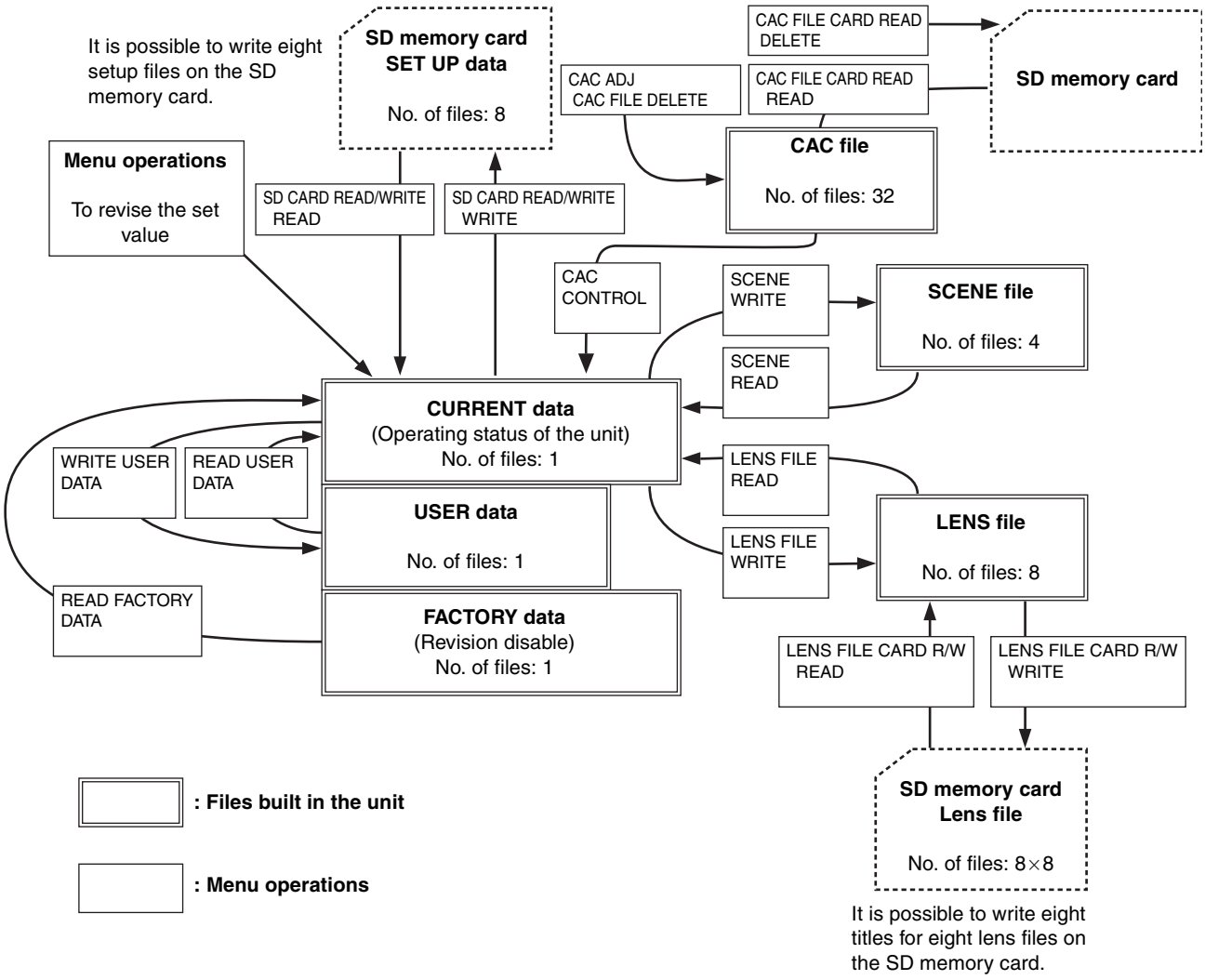

Setting Data Using an SD memory card

An SD memory card (optional accessory) can be used as a setup card that stores up to eight files of settings menu specifications.
This data allows you to quickly reproduce an optimum state.
Regarding SD memory cards, please see <Cautions in using SD memory cards> (page 22).

Handling SD memory cards

An SD memory card may be inserted or removed, either before or after the power is turned on.

To insert an SD memory card

Open the lid of the switch cover, and insert an SD memory card (optional accessory) into the SD memory card slot with the notch upward. Close the lid.

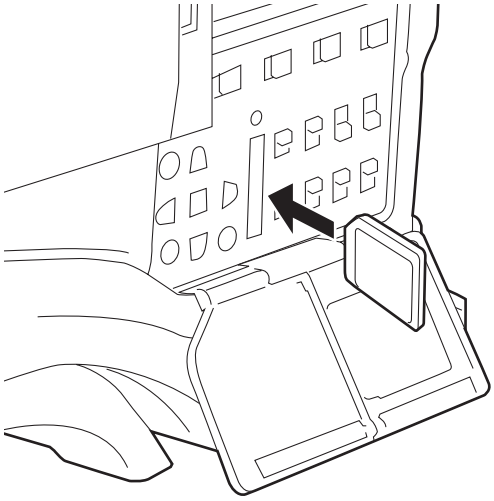

◆Note

An SD memory card must be inserted with the right side facing the slot. If the card is hard to insert, it may be reversed or upside down. Do not force it into the slot. Check the card before re-inserting it.

To remove the SD memory card

Open the lid of the switch cover, and ensure that the BUSY lamp is not illuminated. Then, further depress the SD memory card towards the main unit. This releases the SD memory card from the insertion slot. Take hold of the SD memory card and remove it. Close the lid.

SD memory cards must not be used or stored in an environment where they may be

- Exposed to high temperatures/humidities;
- Exposed to water droplets; or
- Electrically charged.

For storage, the SD memory card must be kept inserted into the unit with the lid closed.

Formatting, Writing and Reading an SD memory card

To format an SD memory card, write settings data or read data on an SD memory card, navigate the menu to the <SD CARD READ/ WRITE> screen from the FILE page.

```
→ < SD CARD READ/WRITE >

   R. SELECT          :1
    READ
   W. SELECT          :1
    WRITE
   CARD CONFIG
   TITLE READ


   TITLE:
   1: ********  5: ********
   2: ********  6: ********
   3: ********  7: ********
   4: ********  8: ********
```

If an SD memory card that is formatted in a standard other than the SD standards and SDHC standards, [FORMAT ERROR] is displayed in the top right section of the window. In this case, reformat the card as follows. Note that the indication “FORMAT ERROR” does not disappear if the SD memory card is replaced with this menu page open. When the SD memory card is replaced, perform TITLE READ.

To format an SD memory card

◆Note

SD memory cards may be formatted via the thumbnail screen. For more information, see [Formatting SD memory cards] (page 127).

1 Navigate the menu to the <SD CARD READ/WRITE> screen.

2 Turn the JOG dial button to move the cursor to the menu option CARD CONFIG.

3 Press the JOG dial button to display the following message:

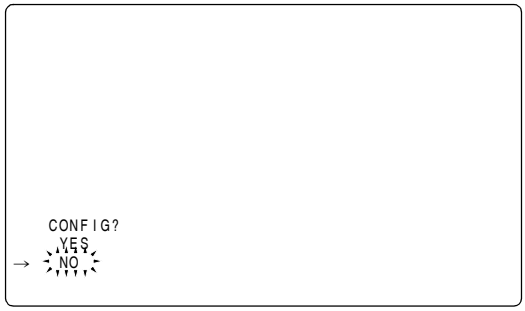

4 To format the SD memory card, turn the JOG dial button to move the cursor to YES. Then, press the dial button.
When the SD memory card has been formatted, the following message appears:

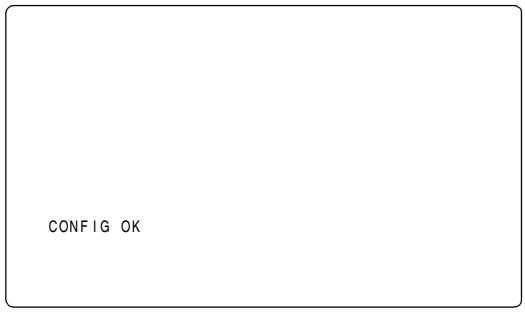

The card will not be formatted if the following message appears when the JOG dial button is pressed:

Error message	Remedy
CONFIG NG NO CARD (No SD memory card inserted.)	Insert an SD memory card.
CONFIG NG ERROR (SD memory card cannot be formatted.)	The card may be defective. Replace the card.
CONFIG NG WRITE PROTECT (SD memory card is write-protected.)	Remove the card and cancel the protect.
CONFIG NG CANNOT ACCCESS (SD memory card not accessible).	Example: The SD memory card is not accessible because it is being played back. After the operation in process, format the card.

5 To exit the menu, press the MENU button.
The settings menu disappears and the status of the unit is indicated at the top and bottom of the viewfinder screen.

◆Note

If an SD memory card is inserted or removed with the <SD CARD READ/WRITE> screen open, the data title cannot be edited.
Move the cursor to the option TITLE READ and press the JOG dial button.
Edit the data title.

To write set data on an SD memory card

1 Navigate the menu to the <SD CARD READ/WRITE> screen.

To select a file number

2 Turn the JOG dial button to move the cursor to the option [W. SELECT]. Then, press the dial button.

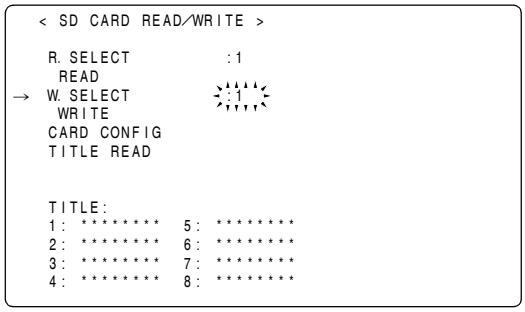

3 Turn the JOG dial button to select a desired number (1 - 8). Then, press the dial button.

To give the selected file a title

4 Turn the JOG dial button to move the cursor to the option [TITLE:].

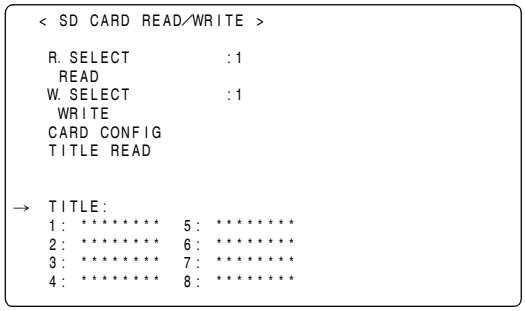

5 Press the JOG dial button. This moves the cursor to the entry area, putting the unit in entry mode.

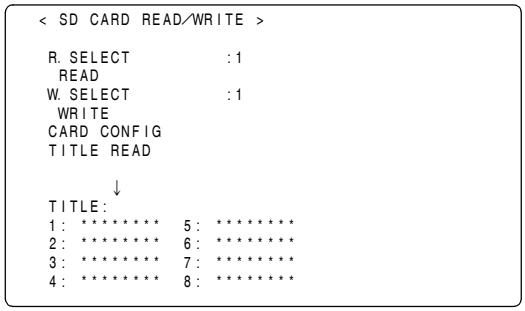

6 Turn the JOG dial button until a desired character appears.
The characters that appear are switched in the following order:

Space: □
↓
Alphabetical characters: A to Z
↓
Numerals: 0 to 9
↓
Symbols: ', >, <, /, -

7 Press the JOG dial button to accept a desired character.

8 Turn the JOG dial button to move the cursor to the next digit (clockwise), and repeat Steps ***6*** - ***7*** to set characters (up to eight characters).

To write data on a selected file

9 When the title is set, turn the JOG dial button to move the cursor to [:].

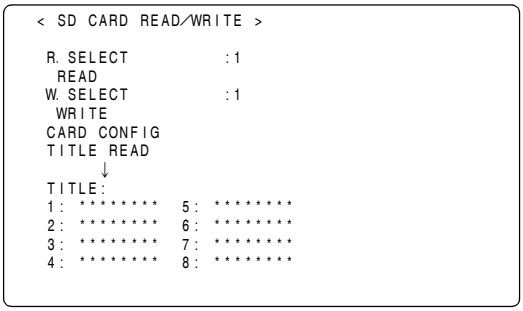

10 Press the JOG dial button to return the cursor to the option [TITLE:].

11 Turn the JOG dial button to move the cursor to the option [WRITE].

12 Press the JOG dial button to display the following message:

The data will not be written if any of the following messages appears when the JOG dial button is pressed:

Error message	Remedy
WRITE NG NO CARD (No SD memory card inserted.)	Insert an SD memory card.
WRITE NG FORMAT ERROR (SD memory card not properly formatted.)	The card has not been formatted using the unit. Replace the card.
WRITE NG ERROR (SD memory card not writable.)	The card may be defective. Replace the card.
WRITE NG WRITE PROTECT (SD memory card write-protected.)	Remove the card and disable the protect.
WRITE NG CANNOT ACCCESS (SD memory card not accessible.)	Example: The SD memory card is not accessible because it is being played back. After the operation in process, format the card.
WRITENG CARD FULL (SD memory card has no free space.)	The card is not writable because it has no free space. Delete unwanted files or replace the card with a new one.

13 Turn the JOG dial button to move the cursor to YES. Then, press the dial button.
When the data has been written, the following message appears:

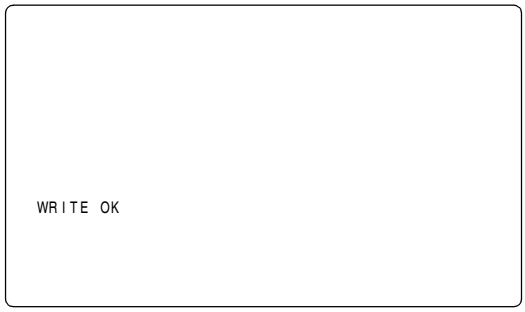

14 To exit the menu, press the MENU button.
The settings menu disappears and the status of the unit is indicated at the top and bottom of the viewfinder screen.

◆Notes

- The SD CARD R/W SELECT screen can be used to select the type of the menu to be written on the SD memory card.
- It is possible to overwrite the setup file on the unit with a setup file from another device. Note that if the file is overwritten, the original setup file from the other device will be lost.
- We recommend managing the respective SD memory cards on the respective devices independently.

To read data on an SD memory card

1 Navigate the menu to the <SD CARD READ/WRITE> screen.

To select a file number

2 Turn the JOG dial button to move the cursor to the menu option [R. SELECT]. Then, press the dial button.

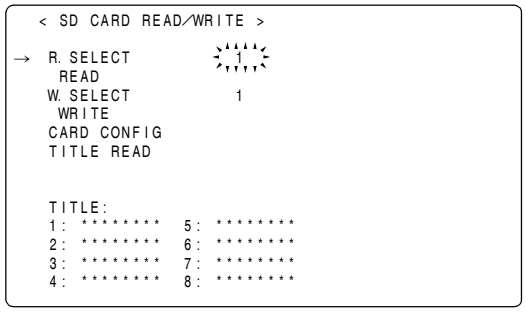

3 Turn the JOG dial button to select a desired number (1 - 8). Then, press the dial button.

To read data on a selected file

4 Turn the JOG dial button to move the cursor to the option [READ].

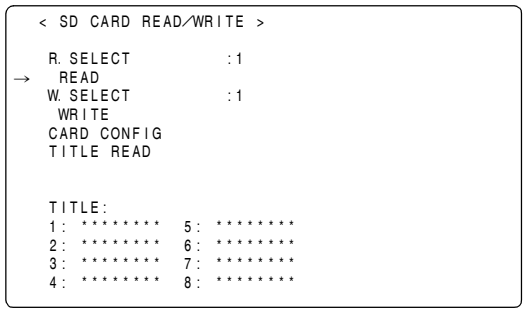

5 Press the JOG dial button to display the following message:

6 Turn the JOG dial button to move the cursor to YES. Then, press the dial button.
When the data has been read, the following message appears:

The data will not be read if any of the following messages appears when the JOG dial button is pressed:

Error message	Remedy
READ NG NO CARD (No SD memory card inserted.)	Insert an SD memory card.
READ NG FORMAT ERROR (SD memory card not properly formatted.)	The card has not been formatted using the unit. Replace the card.
READ NG NO FILE (No file found.)	Write file data.
READ NG ERROR (SD memory card not readable.)	Only data written with the unit is readable.
READ NG CANNOT ACCCESS (SD memory card not accessible.)	Example: The SD memory card is not accessible because it is being played back. After the operation in process, read data.

7 To exit the menu, press the MENU button.
The settings menu will be replaced by status indications for the unit.

How to Use the User Data

It is possible to transfer settings and other data to the user area of the internal memory of the unit.
This data allows you to quickly reproduce an optimum setup state.

To write data, go to the <INITIALIZE> screen from the FILE page. To read the written user data, go to the <SCENE> screen from the FILE page.

To write settings data in the user area

1 Navigate the menu to the <INITIALIZE> screen.

2 Turn the JOG dial button to move the cursor to the option WRITE USER DATA.

```
  < INITIALIZE >

   READ FACTORY DATA
→  WRITE USER DATA
```

3 Press the JOG dial button to display the following message:

```
   WRITE?
   YES
→  NO
```

4 Turn the JOG dial button to move the cursor to YES. Then, press the dial button.
This writes the settings data into the user area of the internal memory of the unit.

5 To exit the menu, press the MENU button.

To read written user data

1 Navigate the menu to the <SCENE> screen.

2 Turn the JOG dial button to move the cursor to the option READ USER DATA.

```
  < SCENE >

→  READ USER DATA
   SCENE SEL          :1
    READ
    WRITE
    RESET

   TITLE1  : ********

   TITLE2  : ********

   TITLE3  : ********

   TITLE4  : ********
```

3 Press the JOG dial button to display the following message:

```
   READ?
   YES
→  NO
```

4 Turn the JOG dial button to move the cursor to YES. Then, press the dial button.
The data written in the user area of the internal memory of the unit is read to complete the setting.

5 To exit the menu, press the MENU button.

The set user data may be also read without navigating the menu.

1 Turn off the POWER switch.

2 Position the WHITE BAL switch at [PRST].

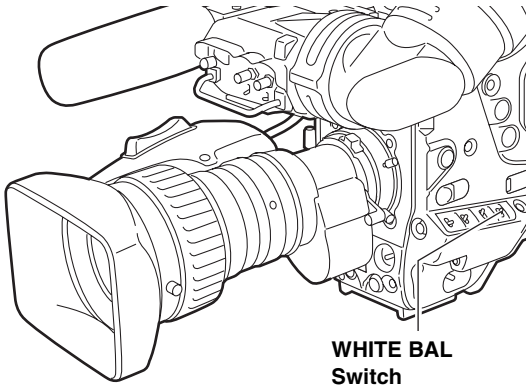

3 With the AUTO W/B BAL switch flipped up, turn on the POWER switch.
This resets all settings for USER menu options to their defaults.

How to Use Scene File Data

It is possible to write the settings data into the scene file area of the internal memory of the unit, or to read data written in this area. Four types of scene files are available. This data allows you to quickly reproduce an optimum setup state.

To change the settings, go to the <SCENE> screen from the FILE page.

To write settings data for scene files

1 Navigate the menu to the SCENE screen.

2 Turn the JOG dial button to move the cursor to the SCENE SEL option.

3 Press the JOG dial button to blink scene file numbers. Then, turn the dial button to select a desired scene file number.

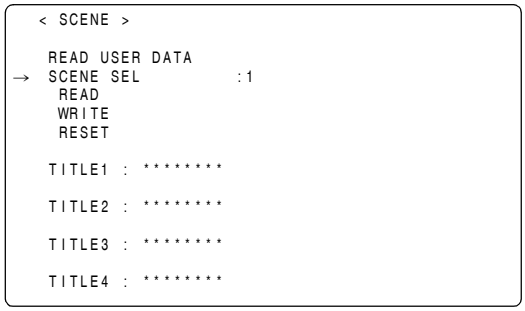

4 Press the JOG dial button to accept the scene file.

5 Turn the JOG dial button to return the cursor to the option WRITE.

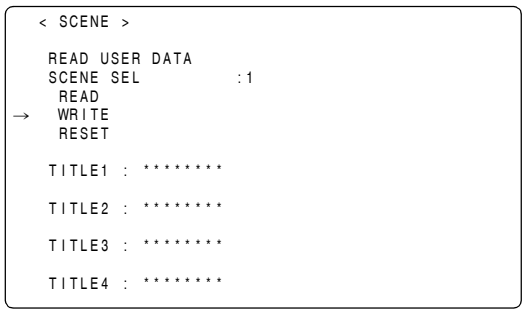

6 Press the JOG dial button to display the following message:

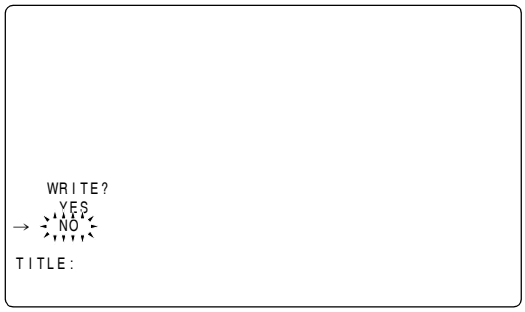

7 Turn the JOG dial button to move the cursor to YES. Then, press the dial button.
This writes the setting data into the scene file area of the unit internal memory.

8 To exit the menu, press the MENU button.

To read settings data for scene files

1 Navigate the menu to the <SCENE> screen.

2 Turn the JOG dial button to move the cursor to the option SCENE SEL.

3 Press the JOG dial button to blink scene file numbers. Then, turn the dial button to select a desired scene file number.

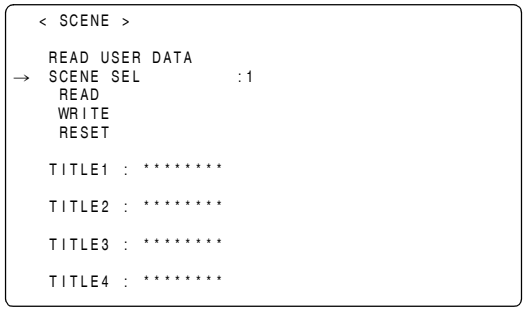

4 Press the JOG dial button to accept the scene file.

5 Turn the JOG dial button to move the cursor to the READ option.

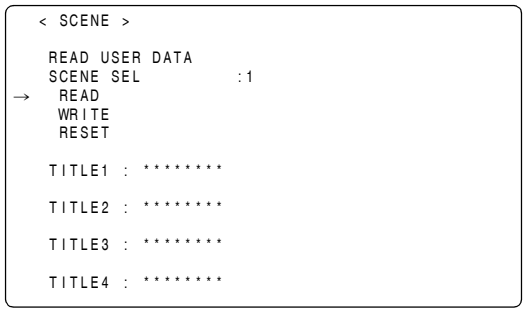

6 Press the JOG dial button to display the following message:

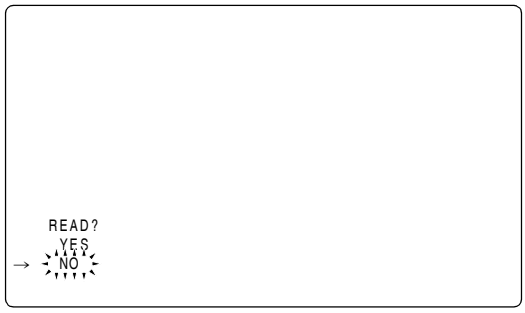

7 Turn the JOG dial button to move the cursor to YES. Then, press the dial button.
The data stored in the scene file area of the internal memory of the unit is read to complete the setting.

8 To exit the menu, press the MENU button.

To return data for scene files to their defaults

1 Navigate the menu to the <SCENE> screen.

2 Turn the JOG dial button to move the cursor to the option SCENE SEL.

3 Press the JOG dial button to blink scene file numbers. Then, turn the dial button to select the scene file that you want to reset.

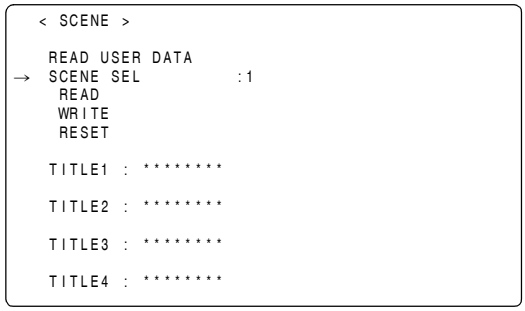

4 Press the JOG dial button to accept the scene file.

5 Turn the JOG dial button to move the cursor to the option [RESET].

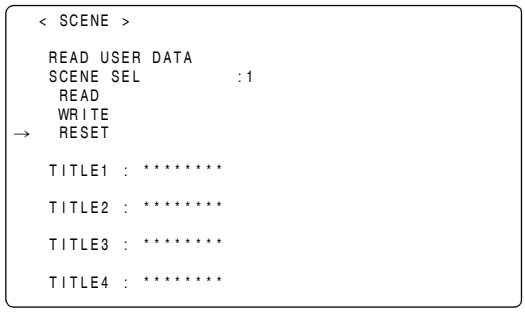

6 Press the JOG dial button to display the following message:

7 Turn the JOG dial button to move the cursor to YES. Then, press the dial button.
The data stored in the scene file area of the internal memory of the unit is reset to the defaults.

8 To exit the menu, press the MENU button.

To title settings data for scene files

1 Navigate the menu to the <SCENE> screen.

2 Turn the JOG dial button to move the cursor to the option [TITLE 1 - 4] for the appropriate scene file.

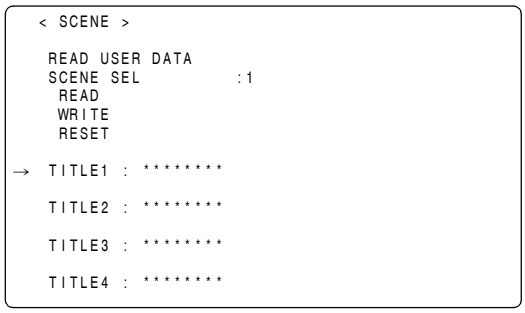

3 Press the JOG dial button to move the cursor to the title entry area, putting the unit in entry mode.

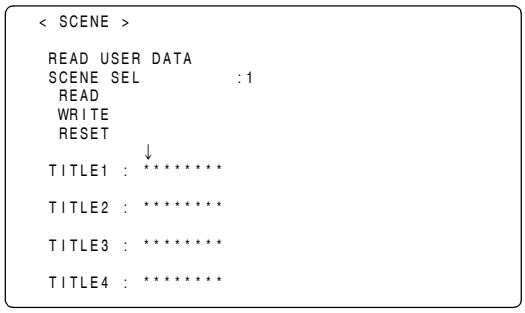

4 Turn the JOG dial button until a desired character appears.
The characters that appear are switched in the following order:

Space: □
↓
Alphabetical characters: A to Z
↓
Numerals: 0 to 9
↓
Symbols: ', >, <, /, -

5 Press the JOG dial button to accept a desired character.

6 Turn the JOG dial button to move the cursor to the next digit (clockwise), and repeat Steps ***4*** - ***5*** to set characters (up to eight characters).

7 When the title is set, turn the JOG dial button to move the cursor to [:].

8 Press the JOG dial button to return the cursor to the options TITLE 1 - 4.

9 Turn the JOG dial button to return the cursor to the option WRITE.

10 Press the JOG dial button to display the following message:

11 Turn the JOG dial button to move the cursor to YES. Then, press the dial button.
This writes the title into the scene file area of the unit internal memory.

12 To exit the menu, press the MENU button.

Resetting Menu Option Settings to Defaults

The menu settings can be reset to their defaults.
To reset the settings to their defaults, select the menu option READ FACTORY DATA in the <INITIALIZE> screen, which is accessible from the FILE page.
All settings will be reset to their defaults.

◆Note
This operation does not delete the scene file, lens file, and the information stored as the user data.

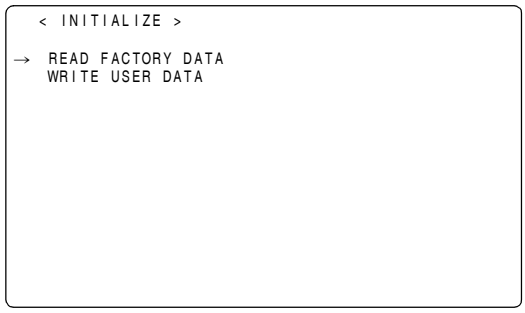

Lens file

The built-in memory of the unit stores eight sets of lens files.
On the SD memory card, eight titles for eight sets of lens files in a table (total 64 sets) can be written.

The following data are recorded on the lens file.
- Title name
- White shading correction value
- Flare compensation value
- RB gain offset correction value

How to provide lens files

Adjustment of white shading

For the white shading adjustment, refer to [Adjusting the Lens White Shading] (page 106)

Adjustment of the flare

Using the menu operations, open the <LENS FILE ADJ> screen from the MAINTENANCE page and adjust the flare in the LENS R FLARE item, the LENS G FLARE item and the LENS B FLARE item.

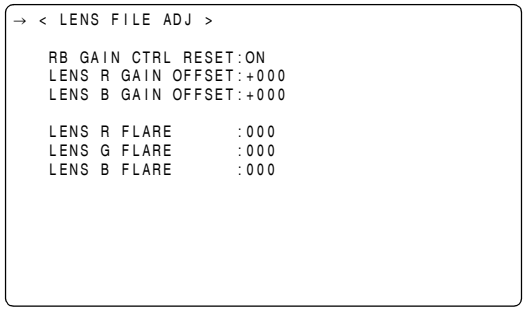

Example of the chart for flare adjustment

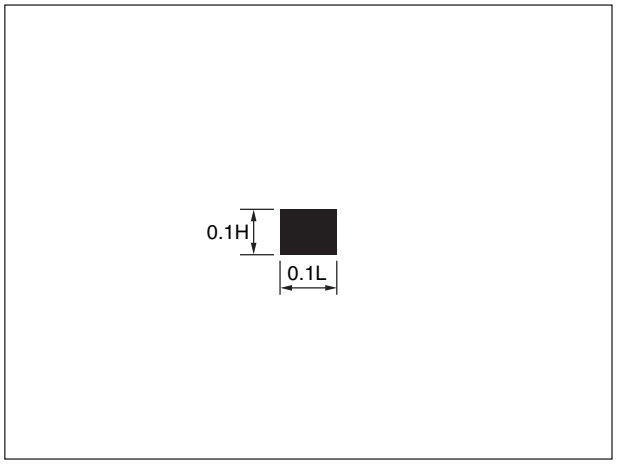

Adjustment of gain offset

For correcting changes in white balance that may occur when replacing the lens.

1. Mount the lens as standard on the unit.
2. Shoot the grayscale chart with appropriate lighting (2000 lx, 3200 K are preferable).
3. Set the WHITE BAL switch to the “A” position.
4. Adjust the lens aperture so that the white window at the center of the grayscale chart is about 80%.
5. Push the AUTO W/B BAL switch to “AWB” to adjust the white balance automatically.
6. Measure the signal level of RGB by using the waveform monitor (WFM).
7. Replace the lens to one where a lens file is provided.
8. Adjust the lens aperture so that the signal level of Gch isthe same signal level as the one obtained in ***6*** above.
9. Using the menu operations, open the <LENS FILE ADJ> screen from the MAINTENANCE page and set the RB GAIN CTRL RESET to ON.
10. Adjust the signal level of Rch to be the same as Gch in the LENS R GAIN OFFSET item.
11. In the same way, adjust the signal level of Bch to be the same as Gch in the LENS B GAIN OFFSET item.

To save the lens file into the built-in memory

Select the file No.

1 Using the menu operations, open the <LENS FILE> screen from the FILE page.

2 Turn the JOG dial button to move the arrow (cursor) to the FILE NO. item.

3 Press the JOG dial button and the file number will flash. Turn the JOG dial button to select the file (1 to 8) to be recorded.

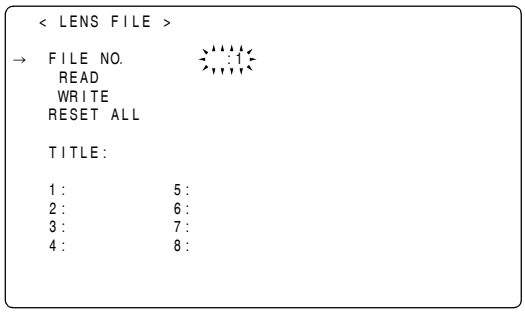

4 Press the JOG dial button to enter the file number.

Give a title to the selected file.

5 Turn the JOG dial button to move the arrow (cursor) to the “TITLE : ” item.

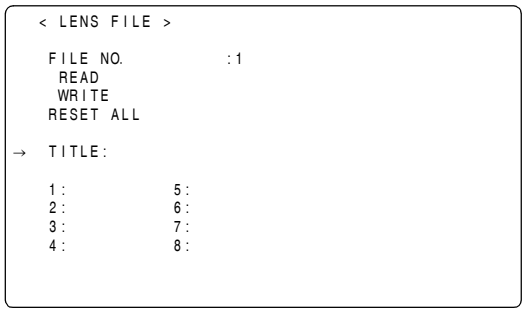

6 When the JOG dial button is pressed, the arrow (cursor) moves to the title input area, and the input mode is established.

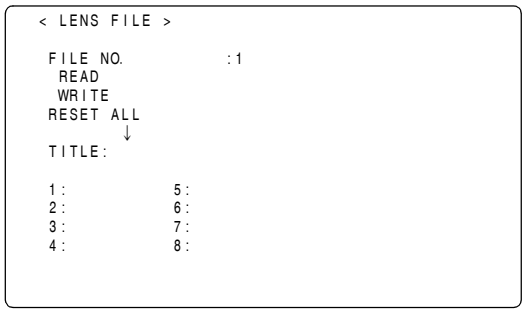

7 Press the JOG dial button again and turn it until the character to be set is displayed.
When the button is turned, the character displayed is switched in the following sequence:

Space: □
↓
Alphabetical characters: A to Z
↓
Numerals: 0 to 9
↓
Symbols: ', >, <, /, -, . , x

8 Press the JOG dial button to enter the character.

9 Turn the JOG dial button to move the arrow (cursor) to the next position (right), and repeat steps ***7*** and ***8*** to set the characters (maximum of 12).

10 When the title has been input, turn the JOG dial button to move the arrow (cursor) to the “:” position.

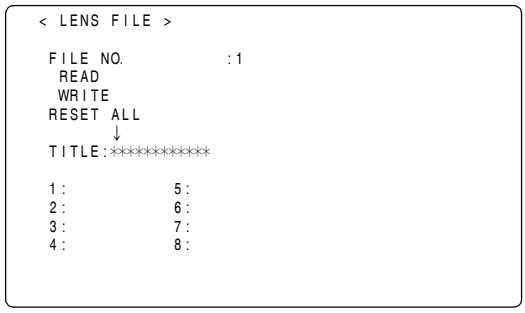

11 When the JOG dial button is pressed, the arrow (cursor) returns to the “TITLE : ” item.

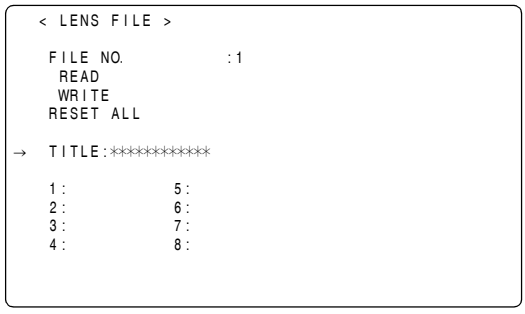

12 Turn the JOG dial button to move the arrow (cursor) to the WRITE position.

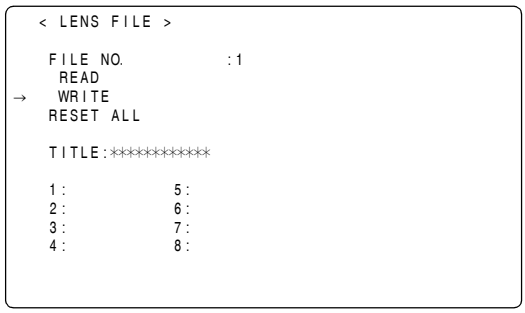

13 When the JOG dial button is pressed, the following message appears.

14 Turn the JOG dial button to move the arrow (cursor) to YES, and press the JOG dial button.
The current white shading correction value, the flare compensation value, and the RB gain offset correction value are stored in the built-in memory of the unit.

◆Note
The values will not be stored in the unit's internal memory if another menu screen is selected without executing WRITE or if the menu is exited.

15 Press the MENU button.
The setting menu is cleared, and the displays showing the unit's current statuses appear at the top and bottom of the viewfinder screen.

To read the lens file from the builtin memory

1 Using menu operations, open the <LENS FILE> screen from the FILE page.

2 Turn the JOG dial button to move the arrow (cursor) to the FILE NO. item.

3 Press the JOG dial button and the file number will flash. Turn the JOG dial button to select the file (1 to 8) to be read.

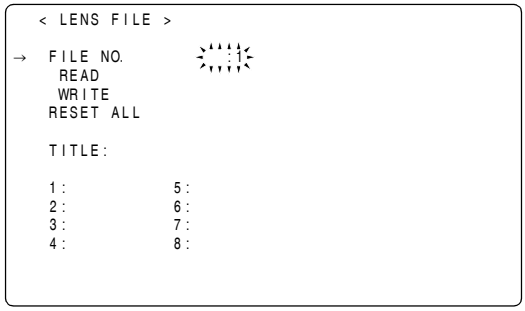

4 Press the JOG dial button to enter the file number.

5 Turn the JOG dial button to move the arrow (cursor) to the READ item.

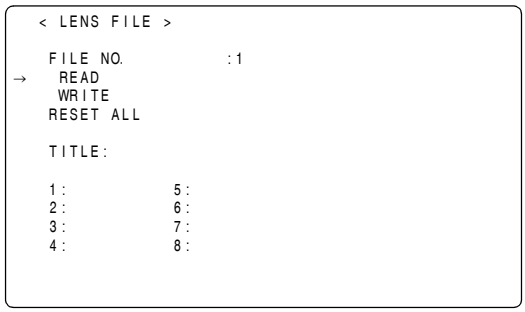

6 When the JOG dial button is pressed, the following message appears.

7 Turn the JOG dial button to move the arrow (cursor) to YES, and press the JOG dial button.
The recorded correction values for the white shading, flare, and RB gain offset are read.

8 Press the MENU button.
The setting menu is cleared, and the displays showing the unit's current statuses appear at the top and bottom of the viewfinder screen.

To write in and read out the lens file to/from the SD memory card

The contents of the eight lens files stored in the unit's internal memory can be saved onto an SD memory card as card files under a single title. A total of eight titles can be saved on an SD memory card.
Furthermore, the eight lens files saved under one title on an SD memory card can be loaded into the unit's internal memory.

The correlation between the lens files stored in the internal memory and lens files saved on an SD memory card is shown below.

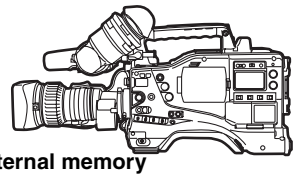

Internal memory

8 lens files

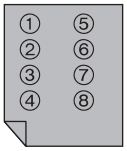

Up to 8 sets of the lens file can be stored in the built-in memory.

The contents of 8 lens files can be saved onto an SD memory card as card files under one title or they can be loaded from the SD memory card.

Card files

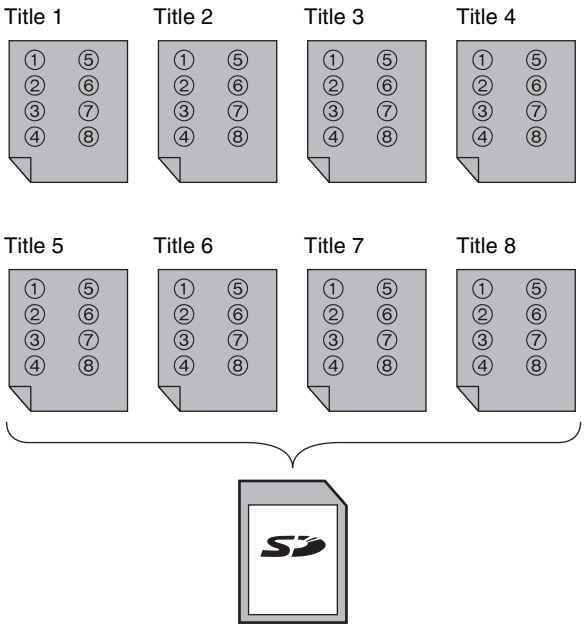

A total of 64 lens files (8 lens files × 8 titles) can be saved on an SD memory card.

Saving lens files on the SD memory card

Select the card file No.

1 Using menu operations, open the <LENS FILE CARD R/W> screen from the FILE page.
When the message "FORMAT ERROR" appears in the upper right corner, format the SD memory card with the camera-recorder. SD cards can be formatted through the CARD CONFIG menu option on the READ/WRITE screen. For more information, see, [Handling SD memory cards] (page 83).

2 Turn the JOG dial button to move the arrow (cursor) to the CARD FILE SELECT item.

3 Press the JOG dial button and the card file number will flash. Turn the JOG dial button to select the file (1 to 8) to be recorded.

```
  < LENS FILE CARD R/W >

→ CARD FILE SELECT :1
   READ
   WRITE
  TITLE READ

  TITLE:

  1:          5:
  2:          6:
  3:          7:
  4:          8:
```

4 Press the JOG dial button to enter the file number.

Give a title to the selected card file.

5 Turn the JOG dial button to move the arrow (cursor) to the "TITLE :" item.

```
  < LENS FILE CARD R/W >

  CARD FILE SELECT :1
   READ
   WRITE
  TITLE READ

→ TITLE:

  1:          5:
  2:          6:
  3:          7:
  4:          8:
```

6 When the JOG dial button is pressed, the arrow (cursor) moves to the title input area, and the input mode is established.

Now perform step ***7*** on page 93 through step ***15*** on page 94.

Loading lens files from the SD memory card

1 Using menu operations, open the <LENS FILE CARD R/W> screen from the FILE page.

2 Turn the JOG dial button to move the arrow (cursor) to the CARD FILE SELECT item.

3 Press the JOG dial button and the card file number will flash. Turn the JOG dial button to select the file (1 to 8) to be read.

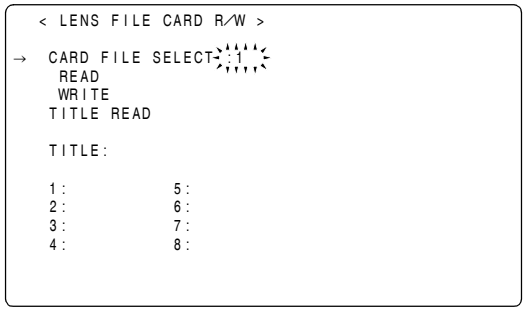

4 Press the JOG dial button to enter the file number.

Now perform steps *5* through *8* on page 94.

◆Note

The card file titles on the SD memory card are displayed on the <LENS FILE CARD R/W> screen, but the titles of the lens files contained in the card files are not shown on this screen.

To display these titles, load the files, and check the titles on the <LENS FILE> screen.

The lens files in the unit's internal memory will be rewritten as the loaded lens files at this time. For this reason, save the lens files in the internal memory onto the SD memory card first to back them up before loading them on the SD memory card.

Chromatic Aberration Compensation (CAC)

CAC is a function that automatically corrects registration errors mainly caused by slight chromatic aberration, which cannot be corrected with lenses, and minimizes color weepage on the images.

What is the chromatic aberration?

Chromatic aberration means magnification ratio chromatic aberration. Magnification ratio chromatic aberration is caused by differences in the in red (R), green (G), and blue (B) refractive indexes of a lens. The lens itself corrects chromatic aberration but the astigmatism remains in the surrounding area in particular. The zooming ratio, iris, and focal distance involves complicated chromatic aberration phenomena in a zoom lens. Images have registration errors.

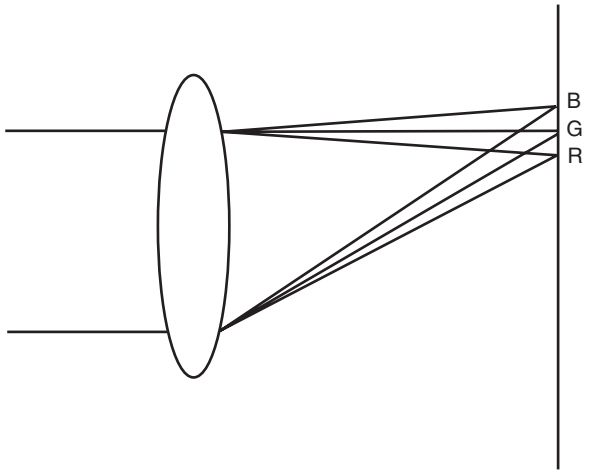

Chromatic aberration compensation function

To correct the chromatic aberration, record the chromatic aberration characteristics of the lens for the zooming ratio, iris, and focal distance in the main unit of the camera recorder and connect a lens suitable for these characteristics. Then perform the correction in accordance with the zooming ratio, iris, and focus distance of the lens.
The CAC data for the following four kinds of lenses are stored in the unit at the time of shipment from the factory.

Indication on the unit	Supporting lens model No.
HA16×6.3BERM-M58	HA16×6.3BERM-M58
HA22×7.8BERM-M58	HA22×7.8BERM-M58
HJ17E×7.6B IASE	HJ17E×7.6B IASE
HJ22E×7.6B IASE	HJ22E×7.6B IASE

◆Note

After the release of this camera, visit our Web site at the address given below for details on new lenses compatible with this function and any changes in this function.

https://eww.pavc.panasonic.co.jp/pro-av/

CAC operation

For the four lenses listed on the left

1. Install the lens on the unit and connect the lens connector.
2. Open the CAC ADJ MENU on the MAINTENANCE MENU screen.
3. Turn ON the CAC CONTROL.
   If the lens product number recorded on the unit coincides with the product number of the connected lens, the CAC data stored in the unit are read out automatically.

```
  < CAC ADJ >

→ CAC CONTROL      :ON
  CAC FILE DELETE
  CAC FILE NO.     :01

  TITLE SCROLL     :01
  01:HA22X7.8BERM-M58
  02:HA16X6.3BERM-M58
  03:HJ17EX7.6B IASE
  04:HJ22EX7.6B IASE
  05
  06
  07
  08
```

Confirmation of the CAC operation status

1. When the MENU is not displayed on the VF screen, press the mode check switch.
   If letters of the CAC are indicated at the left top of the viewfinder screen, the CAC is operating properly. If the letters of CAC are not indicated, the CAC is not operating.
2. Open VF INDICATOR2 MENU on the VF MENU screen and turn On the CAC indication, and then the letters of CAC are indicated in the left top of the viewfinder screen.

```
60I              AVC-I
1080             100
CAC




3.2K
1A P 0dB
```

To read the CAC FILE from an SD memory card

1 Insert the SD memory card with the CAC FILE downloaded from our support website.
For downloading, refer to the following URL.

https://eww.pavc.panasonic.co.jp/pro-av/

2 Open the <CAC FILE CARD READ> screen from the FILE page via the menu operation.

3 Select “TITLE READ” using the JOG dial button and then press the JOG dial button.
The lens product number is indicated in the TITLE column.

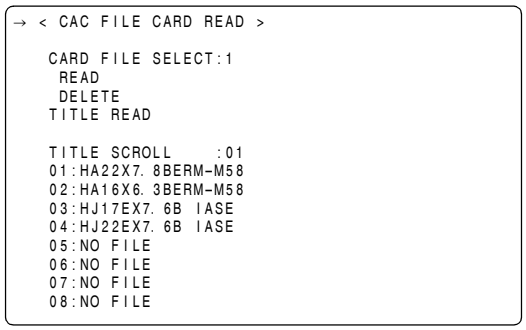

4 Select CARD FILE SELECT using the JOG dial button and then press the JOG dial button.

5 Select the TITLE NO to be read and press the JOG dial button.

6 Select “READ” using the JOG dial button and then press the JOG dial button.
The following screen is displayed.

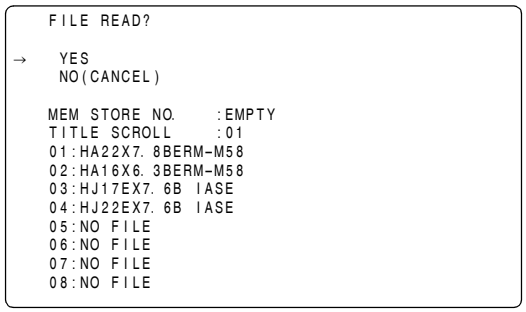

7 Select YES using the JOG dial button and then press the JOG dial button.
The CAC FILE for the lens selected in step 4 is recorded in memory on the unit.
If “EMPTY” is selected in MEM STORE NO: EMPTY/1/2 --- at this time, data are recorded in available space of the CAC FILE numbers on the unit. If “1” is selected, the data will overwrite the contents of CAC FILE No. 1.

If the following messages are displayed when the JOG dial button is pressed, the data cannot be read out.

Error message	Measures
READ NG NO CARD (No SD memory card is inserted)	Insert an SD memory card.
READ NG NO FILE (No file is available)	Select a file containing data and perform the read operation again.
READ NG ERROR (Data cannot be read out)	Insert an SD memory card again, and then perform the read operation again.
READ NG CANNOT ACCESS (It is impossible to access the data)	It is impossible to access the SD memory card while the card is in use. After completion of the respective operations, perform the read operation again.
READ NG FILE DATA INVALID (File data are abnormal)	The written file data have errors. Use the proper file data.
READ NG FILE MEMORY FULL (Memory is full)	The memory card is full, and new data cannot be written on it. Delete unnecessary CAC data and then perform the read operation again

8 To store multiple CAC files in the unit, repeat Steps 3 to 7.

9 To close the menu operation, press the MENU button.
The setting menu disappears, and the current state of the unit is displayed.

◆Notes

- The unit is capable of recording 32 CAC files. When the CAC FILE is full, delete any of the CAC Files.
- While the SD memory card is inserted, the BUSY lamp for the SD memory card blinks, which is normal and not a malfunction.

To delete the CAC FILE from the unit

1 Open <CAC ADJ> from the MAINTENANCE page using the menu operation.
The following screen is displayed.

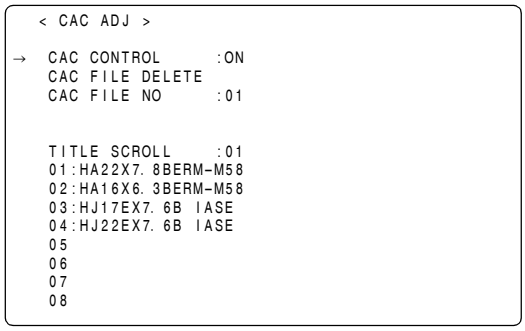

2 Select “OFF” in CAC CONTROL.

3 Select the lens product number to be deleted in CARD FILE NO using the JOG dial button.

4 Press the JOG dial button to fix the selected operation.

5 Select “CARD FILE DELETE” using the JOG dial button and then press the JOG dial button.

6 When the following screen is displayed, move the arrow (cursor) to YES by turning the JOG dial button and then press the JOG dial button.

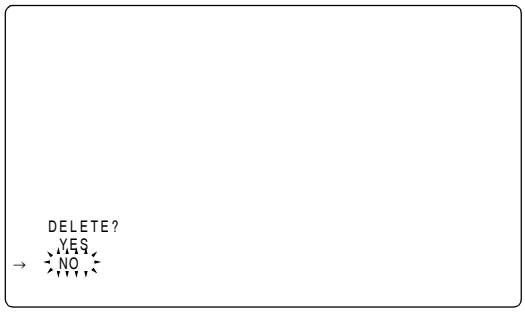

To delete the CAC FILE from the SD memory card

1 Open <CAC FILE CARD READ> from the FILE page using the menu operation.
The following screen is displayed.

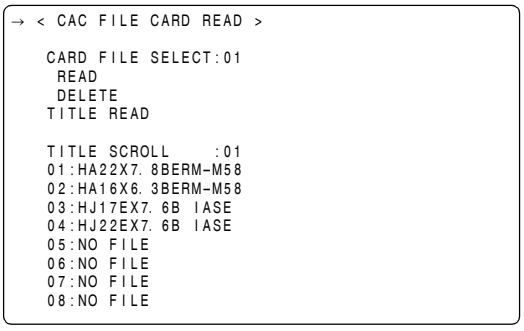

2 Select “TITLE READ” using the JOG dial button and then press the JOG dial button.
The lens product number is displayed in the TITLE part.

3 Select “CARD FILE SELECT” using the JOG dial button and then press the JOG dial button.

4 Select the “TITLE NO” of the CAC FILE to be deleted, and then press the JOG dial button.

5 Select “DELETE” using the JOG dial button and then press the JOG dial button.
The following screen is displayed.

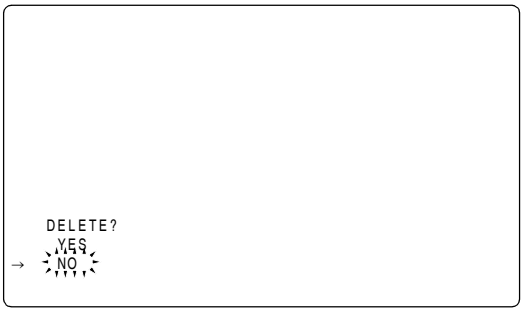

6 Move the arrow (cursor) to YES by turning the JOG dial button and then press the JOG dial button.

If the following messages are displayed when the JOG dial button is pressed, the data cannot be deleted.

Error message	Measures
DELETE NG NO CARD (No SD memory card is inserted)	Insert an SD memory card.
DELETE NG ERROR (Data cannot be deleted)	It is assumed that the SD memory card is defective. Replace the card.
DELETE NG WRITE PROTECT (The SD card is write protected)	Eject the SD memory card and release write protection.
DELETE NG CANNOT ACCESS (It is impossible to access the data)	It is impossible to access the SD memory card while the card is in use. After completion of the respective operations, perform the read operation again.
DELETE NG NO FILE (No file is available)	Select the FILE NO. containing astigmatism files and perform the delete operation.

7 Move the arrow (cursor) to YES by turning the JOG dial button and then press the JOG dial button. When the write operation is completed, the following message is displayed.

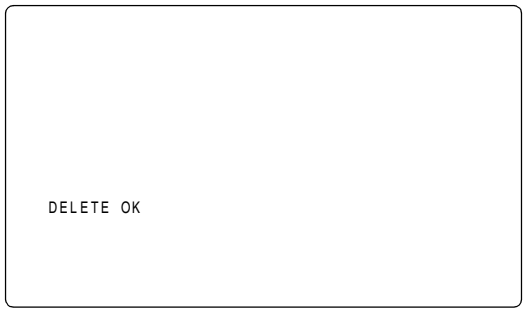

When CAC FILE does not operate properly

The following error messages are displayed in the viewfinder when CAC does not operate properly or CAC files cannot be read properly.

Error message	Meanings	Measures
FILE MEMORY FULL	When the CAC FILE is read from the SD memory card to memory in the unit in EMPTY mode, the built-in memory is full.	Read the CAC FILE in a mode other than EMPTY mode.
CAC FILE DATA NOT FOUND	When the CAC function is set to ON and no CAC FILE applicable to the connected lens is available. This is displayed when the power of the unit is turned on.	Read the CAC FILE that is applicable for the lens to be used.
CAC LENS DATA INVALID	When the unit cannot respond to the return data from the lens, or when any responses other than ones as defined in the CAC FILE are returned.	This lens does not support CAC correction. Although it cannot execute CAC correction, using this lens presents no problems.
LENS INITIALIZE NOT COMPLETED	Initialization of the lens position detection (focus/zoom) in the encoder type is not completed yet.	Turn the focus/zoom ring to through the intermediate point of the operation range.

◆Notes

- When lens optical accessories (converter lens, attachment) are installed, the CAC may not operate properly due to changes in the optical characteristics of the lens. In this case, turn off the CAC function.
- When focus support is used with CANON lenses, data must be recorded after initialization in the automatic initialization mode. The state where the focus ring is moving may be recorded.
- When the CAC does not operate and no error message is displayed, the version of the software for the lens may be out of date and invalid. Please contact the lens manufacturer.

Preparation

Power Supply

A battery pack or an external DC power supply can be used as AJ-HPX3000's power supply.

Using a Battery Pack

Battery packs from the following manufacturers can be used:

- Anton/Bauer
- IDX
- PACO
- Sony

The type of the battery can be checked or changed through the viewfinder or menu screen on the monitor.

- Pressing the MODE CHECK button on the side of the camera-recorder displays the current type of the battery in the upper right corner of the viewfinder display.
- Navigate the menu to open the BATTERY/P2CARD screen from the MAIN OPERATION page. Then, through the BATTERY SELECT menu option, you can check and change the battery type.

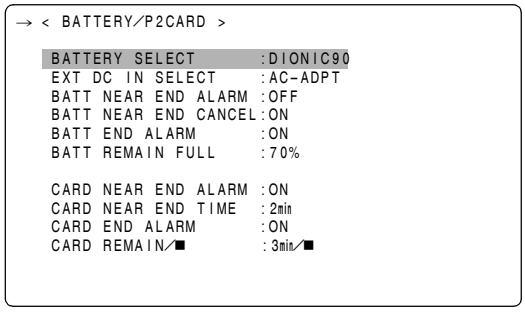

◆Notes

- Other batteries may be used by changing the menu setting, but system compatibility is not guaranteed.
- Charge the battery pack with the battery charger before using it. (Please refer to the battery charger's instruction manual for information about charging.)

Mounting the Battery and Setting the Battery Type

Using an Anton/Bauer Battery Pack

1 Mount the Anton/Bauer battery pack.

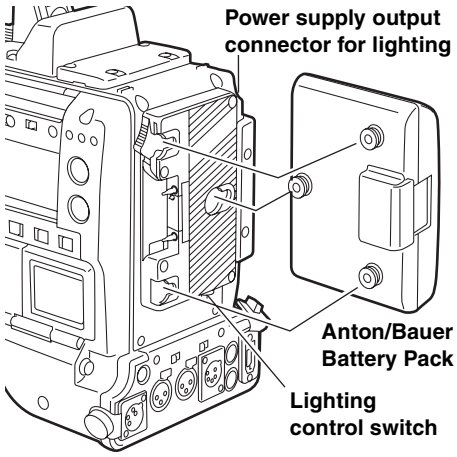

<For your information>
The Anton/Bauer battery holder includes both a power supply output connector for lighting and a lighting control switch, which are convenient when attaching a light. Please contact Anton/Bauer for information about the lighting system.

2 Insert the battery and slide it in the direction of the arrow.

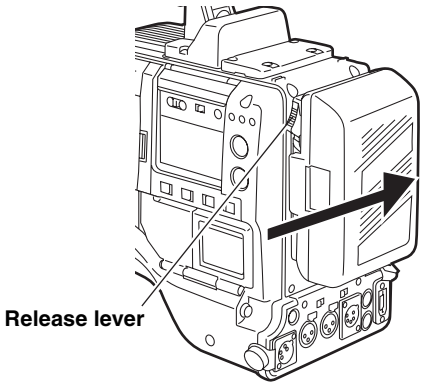

<For your information>
Removing the battery pack
Completely push down and hold the release lever on the battery holder. Then, slide the battery pack in the opposite direction to the arrow while holding the lever down.

3 Setting the battery type.
Select the battery type listed under BATTERY SELECT. Select BATTERY SELECT from the <BATTERY/P2CARD> screen in the MAIN OPERATION page.
Please refer to [BATTERY SETTING1] (page 182) for more information.

The following Anton/Bauer batteries can be used:
- PROPAC14
- TRIMPAC14
- HYTRON50
- HYTRON140
- DIONIC90
- DIONIC160

Using an NP-1 type battery pack

CAUTION:
These servicing instructions are for use by qualified service personnel only. To reduce the risk of fire or electric shock do not perform any servicing other than that contained in the operating instructions unless you are qualified to do so.

1 Remove the battery holder.

2 Mount the NP-1 type battery case on the camera-recorder.

① Tighten the mounting screws.
② Tighten the power contact screws.
③ Insert the upper part of the removed cover in the direction of the arrow.
④ Align the holes in the bottom part (metal part) of the cover with the holes in the case, and secure the cover with the screw.

◆Note
When mounting the battery holder, take care not to pinch the connection cord.

Battery Case (for NP-1 type)

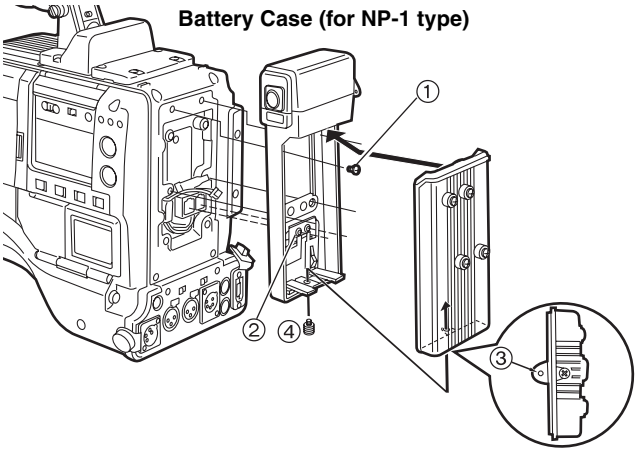

When using a V-mount type battery pack

Mount the V-mount adapter plate.
Insert the plate and slide it in the direction of the arrow.

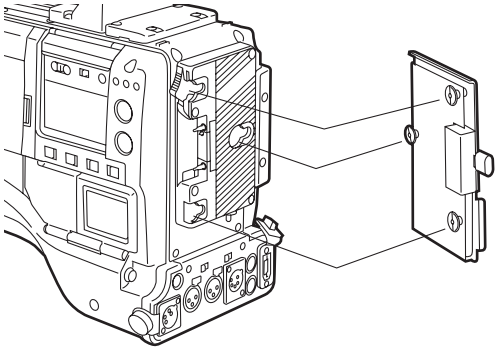

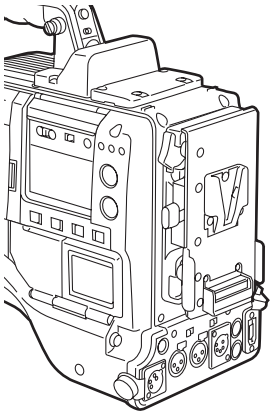

3 Setting the battery type.
Select the battery type listed under BATTERY SELECT. Select BATTERY SELECT from the <BATTERY/P2CARD> screen on the MAIN OPERATION page.
When using another battery which cannot be selected using the BATTERY SELECT item setting, select TYPE A or TYPE B, and set the items that correspond to the characteristics of the battery.
Please refer to [BATTERY SETTING2] (page 183) for more information.

◆Note
For information about the V-mount adapter plate, please contact the store where you purchased the camera-recorder.

Use of the external DC power supply

1 Connect the external DC power supply to the DC IN socket on the unit.

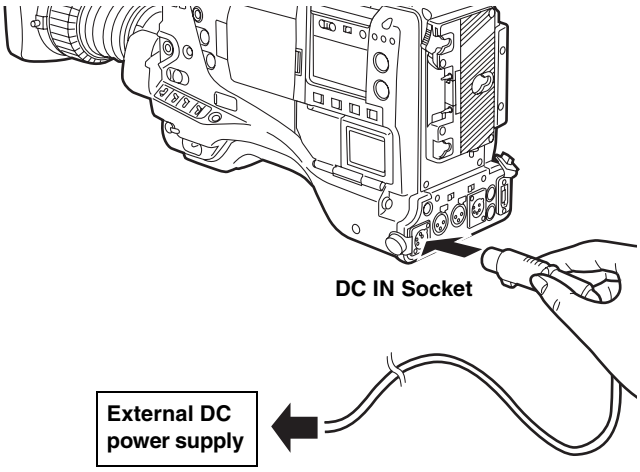

2 Turn “ON” the power switch of the external DC power supply. (If the power switch is available on the external DC power supply)

3 Turn ON the POWER switch on the unit.

Inrush current is generated when the power of the unit is turned on. Insufficient power supply when turning on the power may cause a malfunction. We recommend using an external DC power supply with double the capacity of the total power consumption of the unit and any other connected device that is turned by interlocking with the power on of the unit (the viewfinder). Select the DC cord that is recommended for the external DC power supply.

Confirm the pin arrangements of the DC output connector of the external DC power supply and the DC IN socket on the unit, and connect the proper polarities to each other.
If the +12 V power supply is connected to the GND connector in error, it may cause a fire or failure of the unit.

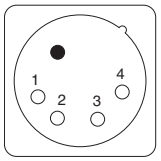

DC IN Socket

Pin No.	Signal
1	GND
2, 3	—
4	+12V

◆Notes

- If both the battery pack and the external DC power supply are connected, the electric power is supplied from the external DC power supply. While the external DC power supply is used, the battery can be mounted and removed on/from the unit.
- When the external DC power supply is used, ensure that the power switch of the external DC power supply is turned on first and then the POWER switch on the unit is turned on. In the case of the reverse operation, a malfunction may occur on the unit since the output voltage of the external DC power supply is raised slowly.

Mounting the lens and Performing the Flange Back and White Shading Adjustments

Mounting the Lens

1 Raise the lens clamping lever and remove the mount cap.

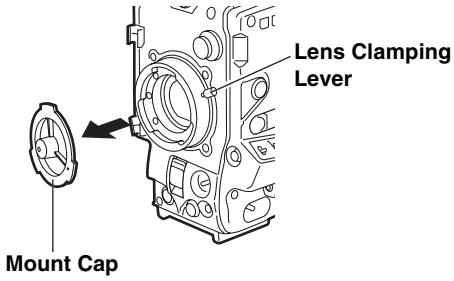

2 To mount the lens, align the indentation at the top center of the lens mount with the center mark of the lens.

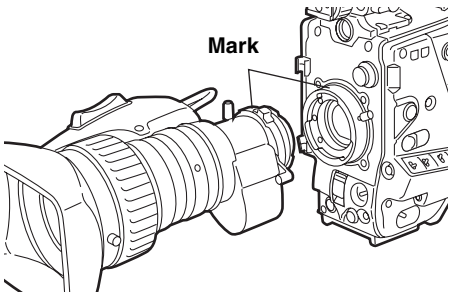

3 Lower the lens clamping lever to clamp the lens.

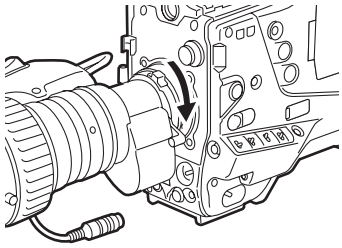

4 Secure the cable through the cable clamp, and plug it into the LENS connector.

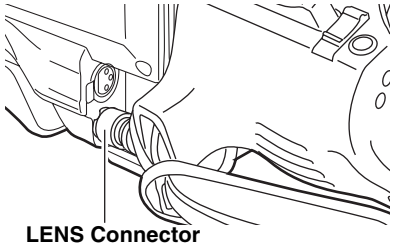

5 Adjust the lens flange back.

◆Notes

- Please refer to the lens instruction manual for guidance on lens handling.
- When the lens is removed, install the mount cap to protect the device.

Adjusting the Lens Flange Back

If images are not clearly focused at both telephoto and wide-angle positions during zoom operations, adjust the flange back (distance from the lens mounting surface to the image formation surface).
Once adjusted, the flange back does not need to be re-adjusted as long as the same lens is mounted on the camera.

◆Note

Please also refer to the lens instruction manual for directions on adjustment and locations of individual lens parts.

1 Mount the lens on the camera.
Make sure you connect the lens cable.

2 Set the lens iris to manual, and fully open the iris.

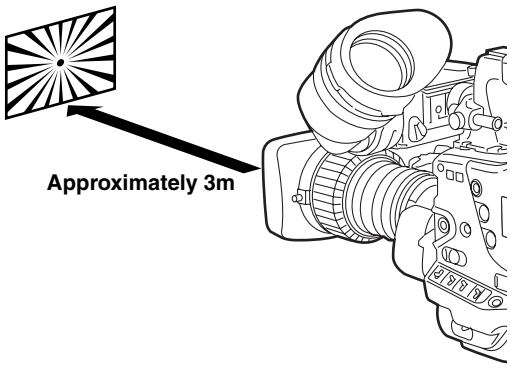

3 Place the flange back adjustment chart about 3 m from the lens and adjust the lighting on the chart to obtain an appropriate video output level.
If the video level is too high, use the filters or the shutter.

4 Loosen the F.f (Flange focus) ring clamping screw.

◆Note

F.b (Flange back) may be indicated on some lenses.

5 Set the zoom ring to the telephoto position, either manually or by electric drive.

6 Aim the lens at the flange back adjustment chart and turn the distance ring to bring the chart into focus.

7 Set the zoom ring to the wide-angle position and turn the F.f ring to bring the chart into focus.
While focusing, take care not to move the distance ring.

8 Repeat Steps *5* to *7* until the lens is in focus at both the telephoto and wide-angle positions.

9 Firmly tighten the F.f ring clamping screw.

Adjusting the Lens White Shading

Method to correct the waveform to be more flat by combining the sawtooth-shaped waveform and the parabola waveform when watching the respective waveforms of R, G and B of the video signals.
Adjust the white shading in the following manner after turning OFF the DS. GAIN.

◆Note

Coloring may occur in the vertical direction near where the lens aperture is open even when the white shading has been adjusted. This is something that is inherent to lenses and optical systems and is therefore not indicative of a failure or malfunctioning.

1 Attach the lens to the camera.
At this stage, do not forget to connect the lens cable.

2 Set the electronic shutter to OFF and the gain to "L (0 dB)."

3 If the extender is attached to the lens, release the extender function.

4 Open the <GAMMA> screen from the PAINT page using the menu operation to confirm that GAMMA MODE SEL is set to "HD." Then, open <VF DISPLAY> from the VF page to confirm that ZEBRA1 DETECT and ZEBRA2 DETECT are the same as shown in the following illustration. If they are not the same, revise the settings and close the menu screen.

```
→ < VF DISPLAY >

   DISP CONDITION      :NORMAL
   DISP MODE           :3
   VF OUT              :Y
   VF DTL              :3
   ZEBRA1 DETECT       :070%
   ZEBRA2 DETECT       :085%
   ZEBRA2              :SPOT
   LOW LIGHT LVL       :35%
   RC MENU DISP.       :OFF
   50M INDICATOR.      :OFF
   MARKER/CHAR LVL     :50%
   SYNCHRO SCAN DISP.  :sec
```

5 Set the ZEBRA switch on the viewfinder to ON.

6 Shoot a white sheet of paper with no unevenness of color.

◆Note

Since fluorescent lights, mercury lamps and other such kinds of lighting tend to flicker, use a light source which is free from flicker such as sunlight or a halogen lamp.

7 Set the lens aperture control to manual, and adjust it so that the zebra pattern covers the whole screen. Check that the lens aperture is between F4 and F11.

◆Notes

- The zebra pattern will not cover the whole screen if there is any unevenness in the lighting. In this case, make adjustments to the position of the lighting, etc.
- Make adjustments to the position of the lighting, etc. also when the lens aperture is not between F4 and F11.
- Be absolutely sure to leave the electronic shutter at OFF.

8 ① Set the WHITE BAL selector switch to "A" or "B," and use the AUTO W/B BAL switch to adjust the white balance automatically (AWB).
② Use the AUTO W/B BAL switch to adjust the black balance automatically (ABB).
③ Again, use the AUTO W/B BAL switch to adjust the white balance automatically (AWB).

9 Repeat step *7*.

10 Using the menu operation, open the <WHITE SHADING> screen from the MAINTENANCE page and a range of items from R H SAW item to B V PARA item, so that the waveform is more flat.

```
   < WHITE SHADING >

   CORRECT          :ON
→  R H SAW          :+000
   R H PARA         :+000
   R V SAW          :+000
   R V PARA         :+000
   G H SAW          :+000
   G H PARA         :+000
   G V SAW          :+000
   G V PARA         :+000
   B H SAW          :+000
   B H PARA         :+000
   B V SAW          :+000
   B V PARA         :+000
```

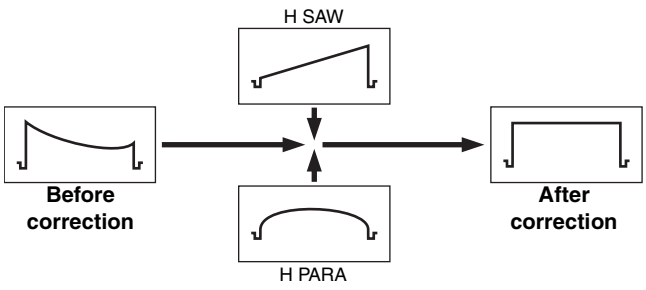

11 When the lens has an extender or ratio converter, repeat steps *7* - *9* to enable the extender or ratio converter function. The camera-recorder stores, as one lens file data item, three different correction values for the following: a lens with an extender, a lens with a ratio converter, and a lens with neither of them.

When making the white shading correction, make the adjustment while observing the R, G, and B waveforms in the horizontal and vertical directions with the waveform monitor.

This now completes the white shading adjustments.
The adjustment values are now stored in the non-volatile memory so that even when the unit's power is turned off, there will be no further need to perform the white shading adjustment.

Preparing for Audio Input

Take the following steps to prepare the camera for connecting audio input devices.

When Using the Front Microphone

AJ-HPX3000 can be equipped with the AJ-MC900G stereo microphone kit (an extra-cost option).

1 Open the microphone holder.

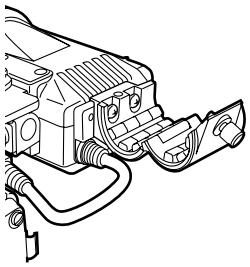

2 Mount the microphone and tighten the clamping screw. The microphone must be attached with the UP mark on the microphone facing up.

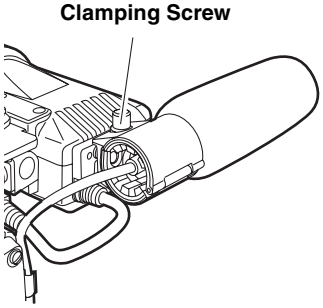

3 Connect the microphone cable to the MIC IN jack on the camera.

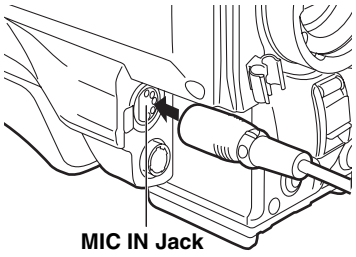

4 Set the AUDIO IN switch to [FRONT] depending on the audio channel to be recorded.

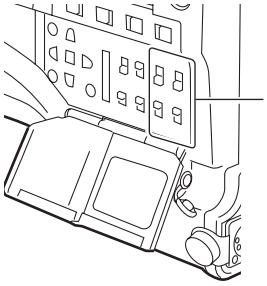

When Using a Wireless Receiver

When Using the Unislot Wireless Receiver

1 Remove the cover to insert the wireless receiver and secure it with the screws.

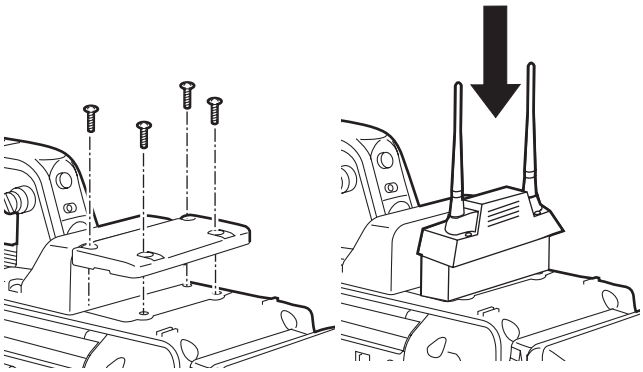

2 Set the AUDIO IN switch to [W.L.] depending on the audio channel to be recorded.

When Using Audio Devices

1 Connect the audio device to the AUDIO IN jack with the XLR cable.

2 Set the AUDIO IN switch to [REAR] for the channel to which the XLR cable is connected.

3 Set the LINE/MIC/+48V selector switch on the rear panel to [LINE].

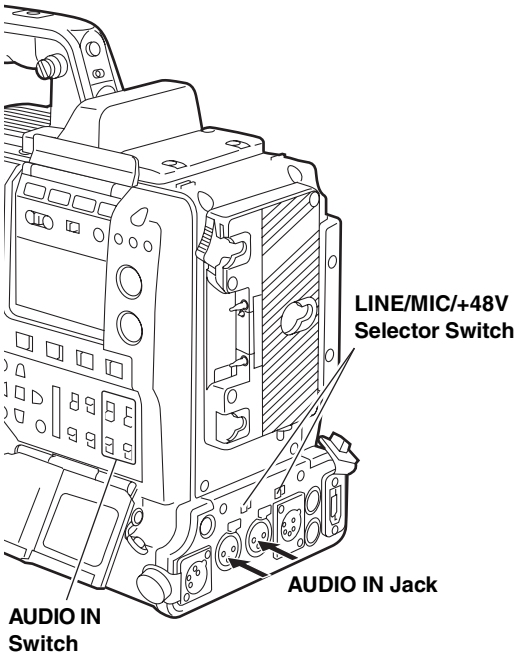

Mounting the Camera on a Tripod

When mounting the camera on a tripod, use the tripod adapter supplied with the camera.

1 Mount the tripod adapter on the tripod.

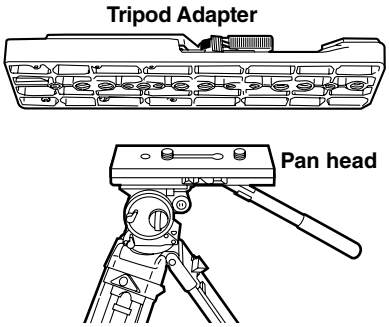

◆Note

Select an appropriate hole in the adapter, taking into account the center of gravity of the camera and tripod adapter combined.

Also, make sure that the diameter of the selected hole matches the diameter of the pan head screw.

2 Mount the camera on the tripod adapter.

Slide the camera forward along the grooves until you hear a “click”.

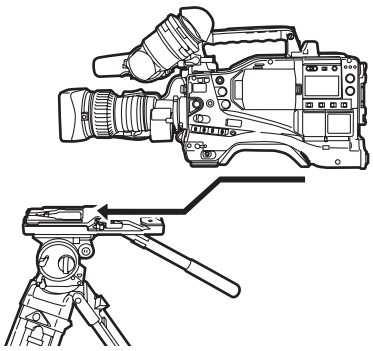

Removing the Camera from the Tripod Adapter

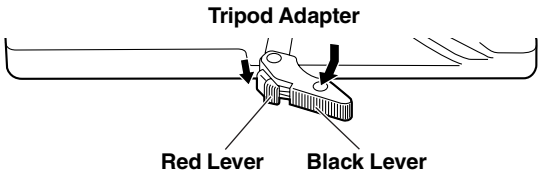

While holding the red lever down, move the black lever in the direction of the arrow, and slide the camera backward to remove it.

◆Note

If the tripod adapter pin does not return to its original position after the camera has been removed, hold the red lever down and move the black lever in the direction of the arrow again, in order to return the pin to its original position.

Please note that the camera cannot be mounted if the pin remains in the center.

Attaching the Shoulder Strap

To detach the shoulder strap, first open the hooks, then detach the strap.

◆**Note**

Make sure that the shoulder strap is securely attached.

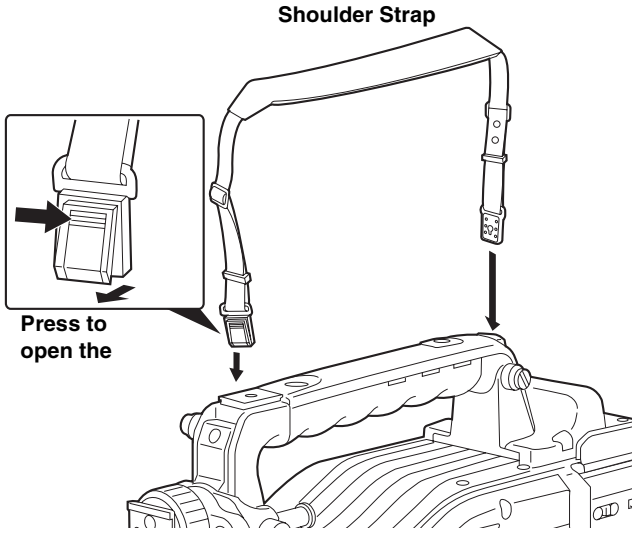

Attaching the Rain Cover

When using the SHAN-RC700 Rain Cover

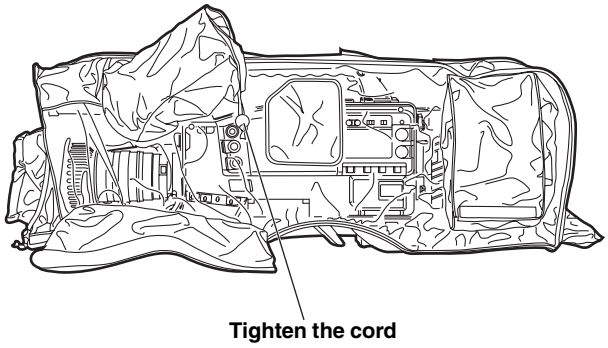

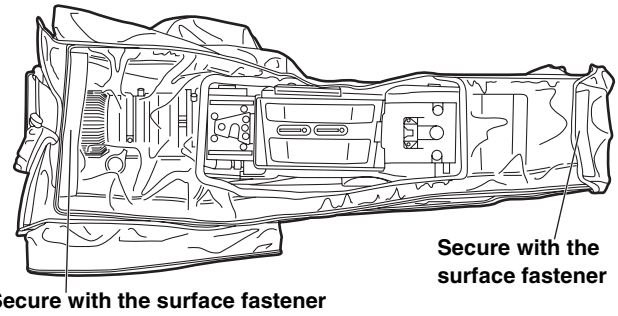

Connection of the remote control unit (AJ-RC10G)

It is possible to control some of the functions remotely by connecting the remote control unit AJ-RC10G (optional accessory).
When AJ-RC10G is connected to the REMOTE connector on the unit and the power switches of both of the unit and AJ-RC10G are turned on, the unit automatically enters the remote control mode.
The remote control mode is released when AJ-RC10G is removed or the power for the AJ-RC10G is turned OFF.

Switch functions in the remote control mode

In the remote control mode, the following switches and buttons on the unit are disabled.

- SHUTTER switch
- MENU button
- JOG dial button
- GAIN switch
- OUTPUT/AUTO KNEE switch
- WHITE BAL switch
- USER MAIN button
- USER 1 button
- USER 2 button

◆Note

In the remote control mode where AJ-RC10G (optional) is connected, it is impossible to apply skin tone detail to the VIDEO/MON output by using the AJ-RC10G SKIN TONE DTL menu.

Recording and playback Operations in the remote control mode

When the remote control is connected, recording and playback can be controlled through both the camera-recorder and the AJ-RC10G.

◆Notes

- The state that was adjusted by connecting AJ-RC10G is stored in the unit. Not to store the adjusted state in the unit, open the FUNCTION MENU of AJ-RC10G to set the RC DATA SAVE item to “OFF”.
- When the dedicated cable is connected or removed, ensure that the POWER switches on both the main unit and AJ-RC10G are turned “OFF”.
- For software of the AJ-RC10G, use Version 1.10-00-000 or higher.
  For instructions on updating of the AJ-RC10G, refer to the support page on the following website.

  https://eww.pavc.panasonic.co.jp/pro-av/

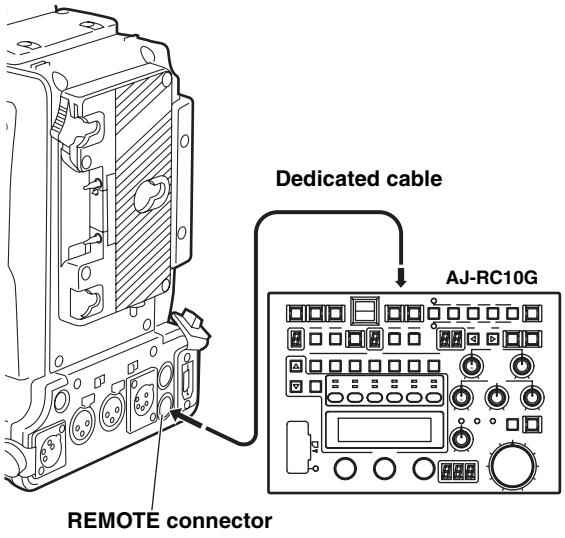

Attaching the Front Audio Level Control Knob

If you use the Front Audio Level control frequently, attach the accessory knob so that it can be easily operated.

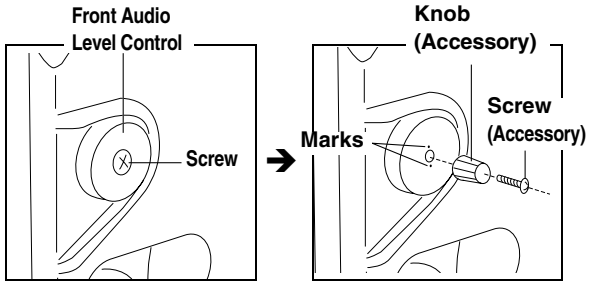

Remove the screw in the center of the Front Audio Level control, and attach the accessory knob using the screw (included). When attaching the knob, be sure to align the marks on the control with the marks on the knob.

Connection of the external switch

It is possible to draw 1.5 A current from the DC OUT connector of the unit.
REC start/stop can be controlled by connecting an external switch to this connector.
Since a tally lamp can be used by connecting an LED to this connector, it is useful for shooting video when fixing the camera on a crane.

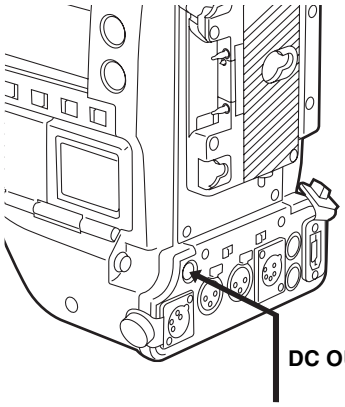

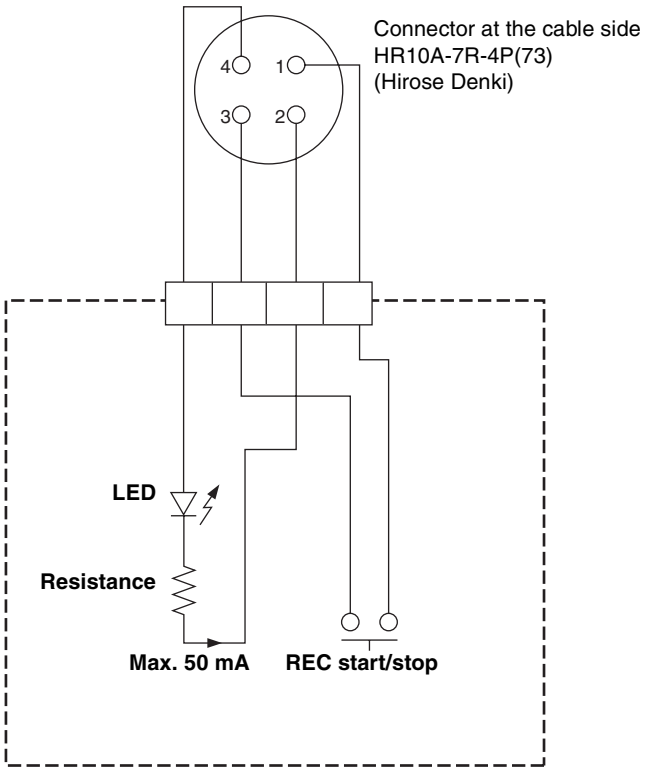

1: GND
2: TALLY OUT
Open collector output on the unit side
TALLY ON : Low impedance
TALLY OFF : High impedance
3: REC start/stop switch
This is connected in parallel to the REC START button on the unit or the VTR button on the lens
4: +12 V

Manipulating Clips with Thumbnails

A clip is a data group that includes the images and voices created from one shooting session, together with additional information such as text memos and meta data. The following manipulations can be performed using the cursor and SET buttons, while checking the images displayed on the LCD monitor:

- Playback, delete, copy or restore the clip.
- Add or delete a shot mark and a text memo on the clip thumbnail.
- Copy part of a clip by using the test memo.
- Change the thumbnail image.
- Format P2 cards and SD memory cards.
- Uploading and editing clip metadata from the SD memory card

Thumbnail Manipulations Overview

Thumbnail screens are configured as follows:

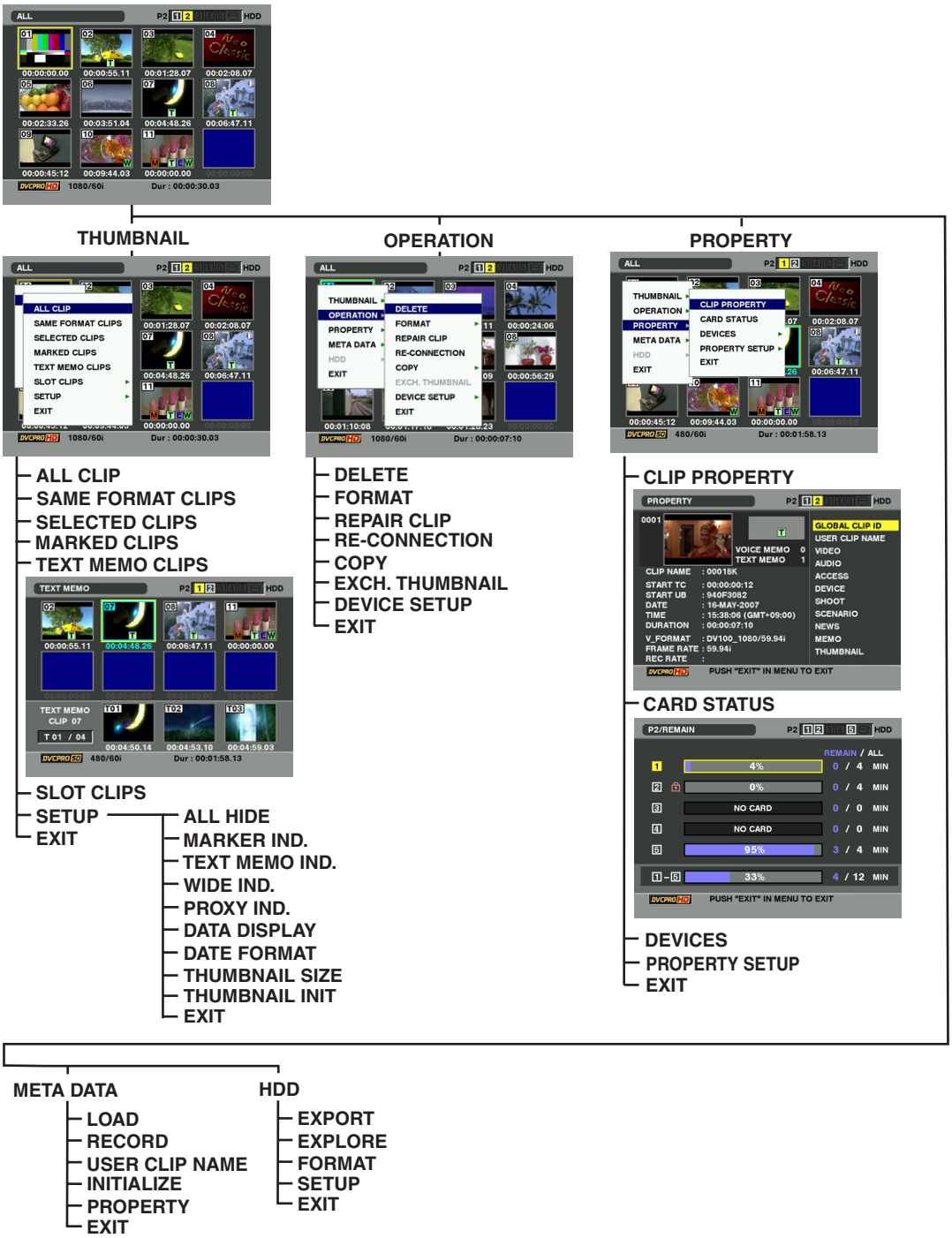

Thumbnail Screen

Press the THUMBNAIL button to display the thumbnail screen on the LCD monitor. Pressing the THUMBNAIL button again returns the display to the regular display. When switching is done from the regular screen display to the thumbnail screen display, all the clips will be displayed on the thumbnail screen.
Pressing the MENU button allows you to navigate the thumbnail menu.

◆Note

With the TCG switch positioned at [SET], when the time code or user bits are set or when camera menus are being manipulated, thumbnails cannot be manipulated.

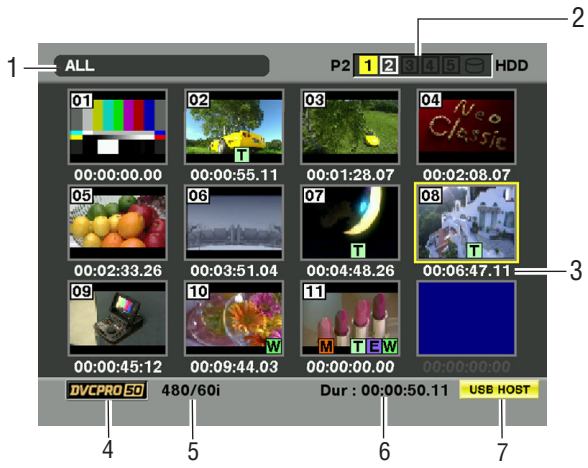

Thumbnail screen

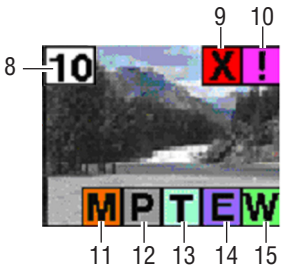

1. Display Mode

The type of the thumbnail indicated on the display and the types of the other information screens are indicated.

ALL: Display all clips.

SAME FORMAT:
The clips in the same format as the system format are shown.

SELECT: The clips selected with the SET button are shown.

MARKER: Display clips with shot marks.

TEXT MEMO:
Display clips with text memo data.

SLOT n: Display clips in the specified P2 card.
(n: 1 to 5, which indicates Slots 1-5.)

UPDATING..:
Indicated when the camera-recorder is updating the screen or reading data. When the screen is being updated, the rotating icon is indicated.

Please refer to [Switching the Thumbnail Display] (page 117) for more information.

2. Slot numbers and HDD status

This section indicates on which P2 card the pointed clip is recorded. The number of the slot that contains the appropriate P2 card is indicated in yellow. If the clip is recorded on more than one P2 card, then the numbers of all slots that contain the appropriate cards are indicated. The numbers of the other slots are shown in white if they contain P2 cards.
When the following P2 card is inserted, the slot number is displayed with a pink frame.

- RUN DOWN CARD
  (A P2 card on which the amount of data exceeds the limit defined in the standards.)
- DIR ENTRY NG CARD
  (A P2 card on which the directory structure does not comply with the standards.)

The USB HDD section is indicated as follows:

- Other than the USB HOST mode: gray
- Not connected in USB HOST mode: gray
- HDD recognized and usable in USB HOST mode: white
- HDD recognized and thumbnails shown in USB HOST mode: yellow
- HDD recognized and data unable to be copied in USB HOST: red

3. Time Display

You can set this to display the time code at the start of clip recording, the user bits at the start of clip recording, the shooting time, the shooting date, the shooting and date or USER CLIP NAME.

4. **Recording mode**
The recording mode for the clip on which the pointer is located is indicated.

5. **System format**
The format for the clip on which the pointer is located is indicated.

6. **Duration**
The duration of the clip on which the pointer is located is indicated.

7. **USB HOST mode indicator**
Indicated when the mode has been switched to USB HOST.

8. **Clip Number**
The numbers set by the camera for all the clips recognised correctly by the P2 card. These numbers are allocated in chronological order, by shooting dates and times.
If clips cannot be played because of different recording formats, they are displayed in red.

9. **X Defective Clip Indicator and ? Unknown Clip indicator**
This marker is displayed for defective clips, which may result from a variety of causes, e.g., powering-down during recording.
Clip with yellow defective clip indicators can be restored in some cases. Please refer to [Restoring Clips] (page 121) for more information.
A clip displayed with a red corrupt marker cannot be restored and must be deleted. If the clip cannot be deleted, format the P2 card.
When clips have different formats, ? is displayed instead of X.

10. **! Incomplete Clip Indicator**
Indicates that although a clip is recorded across multiple P2 cards, one of these cards is not inserted into a P2 card slot.

11. **M Shot Mark Indicator**
This marker is displayed for a clip with a shot mark attached. Please refer to [Shot Mark] (page 119) for more information about shot marks.

12. **P Indicator for clips with proxy**
This marker is displayed for clips with proxy attached.

13. **T Text Memo Indicator**
This marker is displayed for a clip with a text memo attached.

14. **E Edit Copied Clip Indicator**
This marker is displayed on a clip when the model supports edit copy, such as the AJ-HPM100. For more information about edit copying, see the instruction manual for a mode that supports edit copying.

15. **W Wide Clip Indicator**
This marker is displayed for clips recorded with the 16:9 aspect ratio. However, it does not accompany clips in HD format.

Selecting Thumbnails

Multiple thumbnails can be randomly selected in the thumbnail screen.

1 Use the cursor buttons to move the pointer (yellow frame) to the desired clip and press the SET button. The frame around the selected thumbnail changes to a blue frame. Press the SET button again to deselect the clip.

2 Additional clips can be selected by repeating Step *1*.

It is possible to display only the selected thumbnails in the thumbnail screen for playback. Please refer to [Switching the Thumbnail Display] (page 117) for more information.

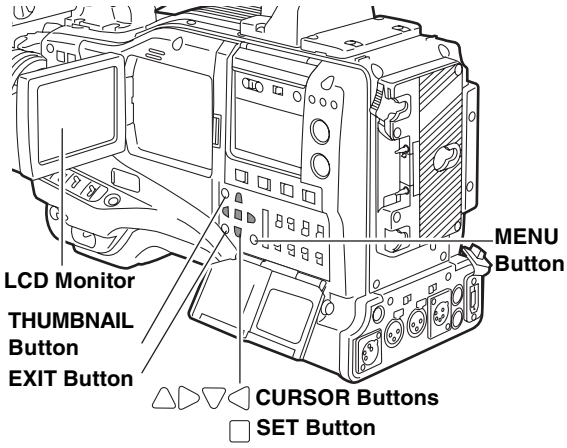

Playing back Clips

1 Press the THUMBNAIL button.
The thumbnail screen appears on the LCD monitor.

2 Use the cursor buttons to move the pointer over the desired clip.

3 Press the PLAY/PAUSE button, and the clip under the pointer will be played back on the LCD monitor.
After playback of the clip under the pointer, subsequent clips are played back in order, according to when they were shot. The thumbnail screen returns after the last clip has been played back.

◆Notes

- When playing back clips, it is not necessary to "select" the clips (blue frames around the thumbnails).
- Clips with clip numbers displayed in red cannot be played.

4 During playback, pressing the REW button starts 4× speed reverse playback, and the FF button starts 4× speed fast playback. Press the PLAY/PAUSE button to return to normal playback.

5 During clip playback, pressing the PLAY/PAUSE button will temporarily stop (pause) the process.
During a pause, pressing the REW button moves the pause position to the beginning of the clip. Pressing the REW button again moves the pause position to the beginning of the previous clip.
During a pause, pressing the FF button moves the pause position to the beginning of the next clip.

6 Pressing the STOP button during clip playback stops the playback and returns the display to the thumbnail screen.

◆Note

When playback is stopped, the position of the pointer remains on the clip that was being played back, regardless of where the playback started. However, when the THUMBNAIL button is pressed to close the thumbnail screen, the pointer will move to the starting clip (i.e., the clip with the earliest recording date and time), not the clip on which the pointer was last positioned.

Switching the Thumbnail Display

The display can be switched so that only those clips matching the specified conditions are displayed in the thumbnail screen.

1 Press the THUMBNAIL button.
The thumbnail screen appears on the LCD monitor.

2 Press the THUMBNAIL MENU button. The thumbnail menu appears.

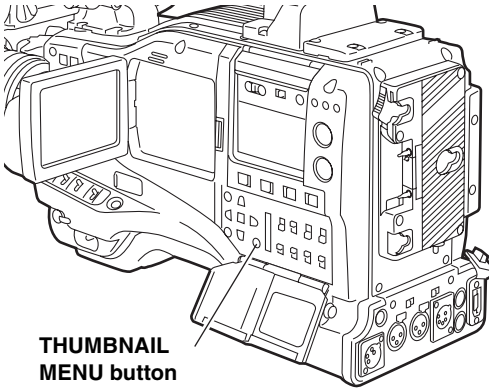

THUMBNAIL MENU button

3 Select THUMBNAIL from the thumbnail menu. Switch the thumbnail display by selecting one of the following items:

ALL CLIP:
Display all clips.

SAME FORMAT CLIPS:
Displays clips in the same format as the system format. System format means the image system set in SYSTEM MODE and REC MODE. Press the MODE CHECK button to display the viewfinder. Refer to [1.System mode] (70 page) and [3.REC mode] (70 page) of [Viewfinder Status Indication Layout].

SELECTED CLIPS:
Display randomly selected clips.

MARKED CLIPS:
Display clips with shot marks attached.

TEXT MEMO CLIPS:
Display clips with text memo data attached.

SLOT CLIPS:
Display clips recorded in the P2 card inserted in the specified slot.
When this item is selected, SLOT1 to SLOT5 are displayed as a sub-menu. Select the desired slot to display the clips.

SETUP:
Please refer to [Setting the Thumbnail Display Mode] (page 128) for information about this item.

EXIT:
Close the sub-menu.

Changing thumbnails

It is possible to replace thumbnails with images that include previously attached text memos while images are recorded or played back.

1 Add text memos to images that you intend to change. Refer to [Text Memo Function] (page 41) for the method to add text memos.

2 Select THUMBNAIL → TEXT MEMO CLIPS to display thumbnails of the clips with text memos.

3 Place the pointer on the clip of the thumbnail that you intend to change, and then press SET. Move the pointer to the text memo display on the lower row.

4 Select the thumbnail that you intend to replace, place the pointer on it, and then select OPERATION → EXCH. THUMBNAIL on the thumbnail menu.

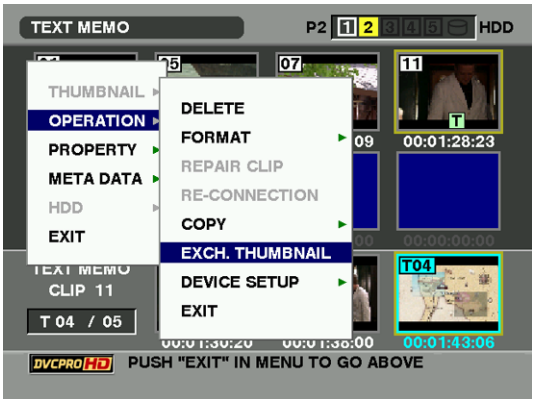

5 Press SET. When the YES/NO confirmation window is displayed, select YES by using the cursor button and the SET button. The menu closes and the thumbnail for the clip is replaced.

◆Notes

Display clip properties by selecting PROPERTY → CLIP PROPERTY on the thumbnail menu to confirm the position of the thumbnail (the number of frames from the top of the clip). Since thumbnails come generally from the top of the clip, [0] is displayed.

Shot Mark

A shot mark can be added to a clip thumbnail to distinguish this clip from the others.

1 Press the THUMBNAIL button.
The thumbnail screen appears on the LCD monitor.

2 Use the cursor buttons to move the pointer over the clip to which you want to attach a shot mark.

3 Press the Shot Mark button.

4 A shot mark will be attached to the clip thumbnail under the pointer.
To delete a shot mark, reposition the pointer over the clip and press the Shot Mark button.

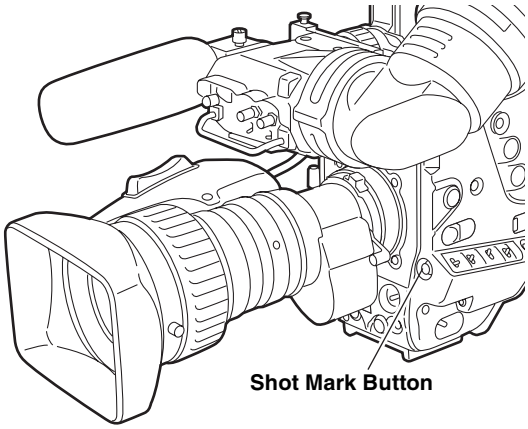

◆**Notes**

- A shot mark can be attached during recording. Please refer to [Shot Mark Function] (page 42) for more information.
- When adding a shot mark to (or deleting the shot mark from) a clip recorded across multiple P2 cards, do this with all these P2 cards inserted into P2 card slots.

Text Memo

During recording or playback, you can add text memos to clips. Text memos can be used to play back clips at some point or break clips into chunks and copy the necessary portions.

Adding a text memo

Text memos can be added in one of the following ways.

- Press the TEXT MEMO button during recording or playback of a clip. A text memo is added to the position where the button is pressed.
- Press the TEXT MEMO button when the thumbnail screen is displayed. A text memo is added to the beginning of the clip.

◆**Note**

One clip can have up to 100 text and voice memos in combination. Note that camera-recorder is not capable of adding or showing voice memos.

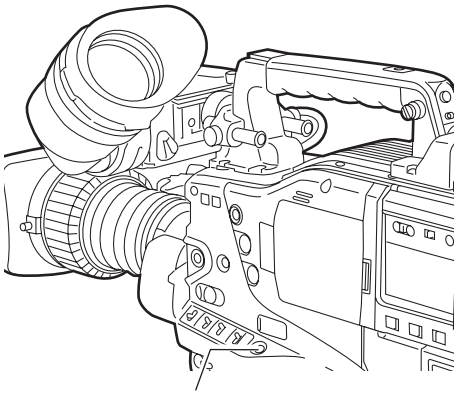

Playing back a clip at the position where a text memo is recorded

1 Press the THUMBNAIL button.
The thumbnail screen appears on the LCD monitor.

2 Press the THUMBNAIL MENU button and select THUMBNAIL → TEXT MEMO CLIPS from the thumbnail menu.
The clip thumbnails with text memos attached are displayed in the upper section of the LCD monitor.
The lower section of the LCD monitor shows information about the text memo on the clip selected by the pointer.

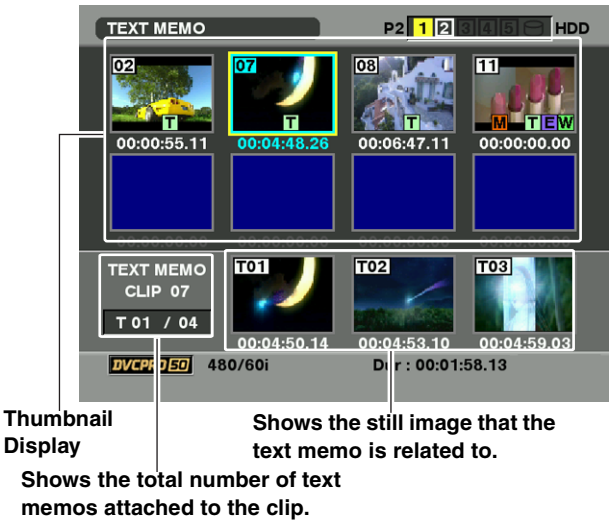

3 Move the pointer over the clip that contains the desired text memo to playback and press the SET button.
The pointer moves to the lower part of the LCD monitor.

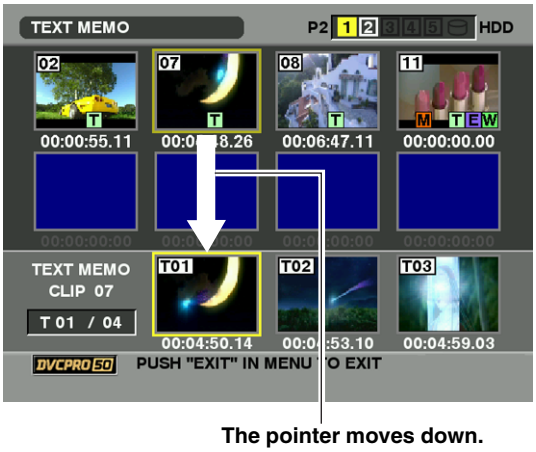

4 With the pointer located in the lower part, move the pointer to the desired text memo number using the cursor right and left buttons (◁▷). Then, press the PLAY button.

5 Playback will start from the time code position of the text memo where the pointer is located. If the STOP button is pressed during playback or the playback has finished at the end of the clip, then the thumbnail screen appears again with the pointer replaced with the text memo where the playback started.

6 Press the THUMBNAIL MENU button to select EXIT or press the EXIT button to return the pointer to the upper part of the thumbnail screen.

Deleting a text memo

1 Select the desired text memo by carrying out steps *1*-*3* for [Playing back a clip at the position where a text memo is recorded] (page 120).

2 Move the pointer to the desired text memo, and then press the SET button.

3 Press the THUMBNAIL MENU button to select OPERATION → DELETE from the thumbnail menu.
YES and NO appear to confirm deletion. Use the cursor buttons and the SET button to select YES.
The text memo is deleted.

Using a text memo to break a clip and copy the necessary portion

1 Select a desired text memo in a clip by carrying out steps *1*-*3* for [Playing back a clip at the position where a text memo is recorded] (page 120).

2 Move the pointer to the desired text memo, and then press the SET button. You can select more than one text memo.

3 Press the THUMBNAIL MENU button to select OPERATION → COPY.

4 User the cursor buttons and SET buttons to select the destination slot. Then, select YES to start copying the clip. The portion between the selected text memo and the next one is copied. If no text memo is found after the selected one, then all part after the selected text memo is copied. If multiple text memos are selected, the selected sections are copied.

5 When the clip is being copied, the camera-recorder indicates the progress of the copy process and cancellation status. To discontinue the copy process, press the SET button. Then, a YES/NO confirmation screen is displayed. Use the cursor buttons and SET button to select YES.

Deleting Clips

1 Press the THUMBNAIL button.
The thumbnail screen appears on the LCD monitor.

2 Use the cursor buttons to move the pointer over the clip you want to delete.
Press the SET button to select the clip.

3 Press the THUMBNAIL MENU button and select OPERATION → DELETE from the thumbnail menu.

4 The following screen appears. Use the cursor buttons and the SET button to select YES.

5 The clip is deleted. All selected clips (in blue-green frames) are deleted by this operation.

◆Note
Pressing the SET button stops the deletion operation in the middle.

Restoring Clips

Restores clips that are defective as a result of sudden powering-down during recording, or removal of the P2 card being accessed.

◆Note
Only those clips with yellow corrupt clip markers can be restored. Delete the clips with red corrupt clip markers. If the clip cannot be deleted, format the P2 card.
During restoration of the clips, however, the defective-clip indicator may change from yellow to red, resulting in inability to restore the clips.

1 Press the THUMBNAIL button.
The thumbnail screen appears on the LCD monitor.

2 Use the cursor buttons to move the pointer over the clip you want to restore (defective clips are indicated by corrupt clip marks).
Press the SET button to select the clip.

3 Press the THUMBNAIL MENU button, and select OPERATION → REPAIR CLIP from the thumbnail menu.

4 The confirmation window appears. Use the cursor buttons and the SET button to select YES.

Reconnection of Incomplete Clips

Incomplete clips may be generated when clips recorded on multiple P2 cards (connected clips) are separately copied to different cards. Reconnection function generates one clip (the original, connected clip) from incomplete clips.

1 Press the THUMBNAIL button.
The thumbnail screen appears on the LCD monitor.

2 Use the cursor and SET button to select incomplete clips to reconnect.
Usually, thumbnails of incomplete clips (clips with ! marker) are displayed in line.

3 Press the THUMBNAIL MENU button and select OPERATION → RE-CONNECTION from the thumbnail menu.

4 The confirmation window appears. Use the cursor buttons and SET button to select YES.

◆Notes

- ! indication stays illuminated until all the incomplete clips that comprise the original clip are reconnected.
- The incomplete clips that were produced by removing the P2 card during LOOP REC cannot be connected unless all clips comprising the original clip are available.

Copying Clips

Selected clips can be copied to the P2 card or SD memory card in the desired slot.

1 Press the THUMBNAIL button.
The thumbnail screen appears on the LCD monitor.

2 Use the cursor buttons to move the pointer to the desired clip and press the SET button.

3 Press the THUMBNAIL MENU button and select OPERATION → COPY from the thumbnail menu.
Select Slot 1-5 or SD memory card as the destination.

4 The confirmation window appears. Use the cursor buttons and SET button to select YES.

◆Notes

- Do not turn off the power or remove a P2 card while data is being copied. Doing so may cause the P2 card to fail. If you should accidentally perform one of the above operations, defective clips will be generated. Delete them, and then copy them again.
- When clips are copied to P2 cards, all the information on the clips is copied. However, when they are copied to the SD memory card *1, video and sound information is not copied, only thumbnails, clip metadata, icons, Voice Memo, proxy, and real-time metadata.
- When there is insufficient recording capacity on the destination, the message “LACK OF REC CAPACITY” is displayed, and copying will not proceed. When clips to be copied include some with defects, the message “CANNOT ACCESS” is displayed, and copying will not proceed. If selected clips include any that are already recorded on the destination P2 card, copying will not proceed.
- To stop copying, press the SET button. Clips currently being copied to the destination will be deleted.
- When identical clips exist on the destination card, the “OVERWRITE?” is displayed. Select “YES” or “NO”.

*1 Regarding SD memory cards to be used, see <Cautions in using SD memory cards> (page 22).

Setting of Clip Meta Data

Information such as the name of person who shot the video, the name of the reporter, the shooting location, or a text memo can be read from the SD memory card, and can be recorded as Clip Meta Data.

Reading Clip Meta Data (metadata upload)

1 Insert the SD memory card that contains the Clip Meta Data (metadata upload file).

2 Press the THUMBNAIL button.
The thumbnail screen appears on the LCD monitor.

◆Note
Press the thumbnail button while pressing MODE CHECK button when a thumbnail is displayed to move to Step *4*.

3 Press the THUMBNAIL MENU button and Select META DATA → LOAD from the thumbnail menu, and press the SET button.

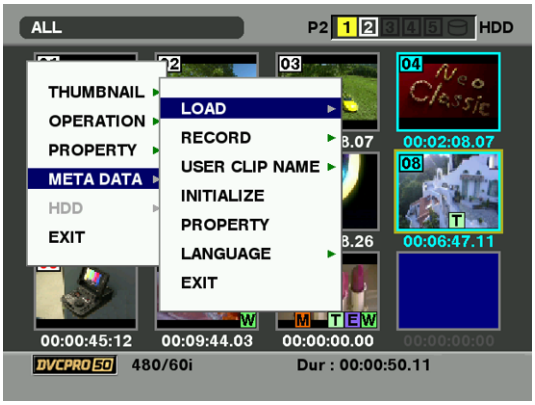

4 Names of metadata upload files stored on the SD memory card are displayed.* Select the desired files using the cursor buttons, and choose YES. Upload starts.
Uploaded metadata is retained even if the power is turned off. For [more information on] confirmation of uploaded data, see [Checking and modifying read metadata] (page 124).

* Press the cursor button (◁) to display the full name of the file, up to 100 characters, at the cursor position. Press the cursor button (▷) to return to the original state.

Clip Meta Data items

Clip Meta Data includes the following items: Underlined items can be set by reading the metadata upload file on the SD memory card. Other items are set automatically during shooting. Using the latest update version of P2 viewer, metadata upload files can be written to SD memory cards using a PC. Download the latest update version of P2 viewer from the following URL and install it to your PC:

https://eww.pavc.panasonic.co.jp/pro-av/

Regarding SD memory cards to be used, see <Cautions in using SD memory cards> (page 22).

◆Note
The file which was edited by except P2 viewer is displayed as “UNKNOWN DATA”, and may not be read.

GLOBAL CLIP ID:
Displays the global clip ID, which indicates the shooting status of the clip.

USER CLIP NAME:
Displays the clip name specified by the user.*1

VIDEO: Displays [FRAME RATE] (frame rate of the clip), [PULL DOWN], and [ASPECT RATIO].

AUDIO: [SAMPLING RATE] (sampling frequency of recorded sound) and [BITS PER SAMPLE] (digitized bit[s] of recorded sound).

ACCESS: Displays [CREATOR] (person who recorded the clip), [CREATION DATE] (date when the clip was recorded), [LAST UPDATE DATE] (date of the latest update of the clip), and [LAST UPDATE PERSON] (person who made the latest update of the clip).

DEVICE: Displays [MANUFACTURER] (name of the device manufacturer), [SERIAL NO.] (serial number of the device) and [MODEL NAME] (model name of the device).

SHOOT: Displays [SHOOTER] (name of the person who shot the video), [START DATE] (start date of shooting), [END DATE] (end date of shooting), and [LOCATION] ALTITUDE/LONGITUDE/LATITUDE/SOURCE/PLACE NAME (altitude, longitude, latitude, and source of the information and name of the location).

SCENARIO:
Displays [PROGRAM NAME], [SCENE NO.], and [TAKE NO.].

NEWS: Displays [REPORTER] (name of the reporter), [PURPOSE] (purpose of shooting), and [OBJECT] (object of shooting).

MEMO*2: Displays [NO.] (the number of the text memo), [OFFSET] (location of the frame where the text memo is added), [PERSON] (person who recorded the text memo added to the clip), and [TEXT] (contents of the text memo).

THUMBNAIL:

Displays the location of the frame (frame offset) and the size (height and width) of the image selected as the thumbnail image.

*1 The USER CLIP NAME recording method is selectable. For details, refer to [Selecting the USER CLIP NAME recording method] (page 125).

*2 Be sure to enter TEXT when entering MEMO. It is not possible to record only PERSON or OFFSET.

◆Note

AJ-HPX3000 only displays printable ASCII characters.

Checking and modifying read metadata

The camera-recorder allows you to check the details of read metadata.

1 Press the THUMBNAIL button.
The thumbnail screen appears on the LCD monitor.

2 Press the THUMBNAIL MENU button to select METADATA → PROPERTY from the thumbnail menu. Then, the screen like this is displayed:

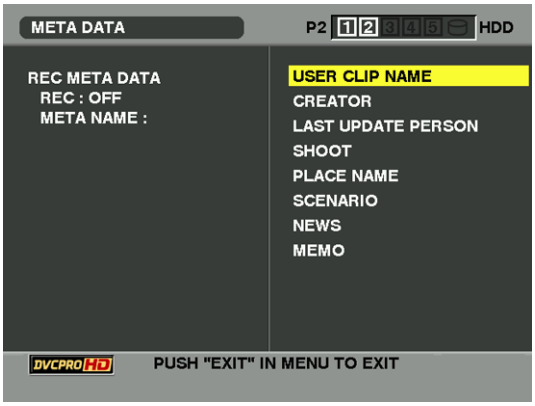

3 Use the cursor buttons to move the pointer. Then, press the SET button. This allows you to view the settings of the read metadata.

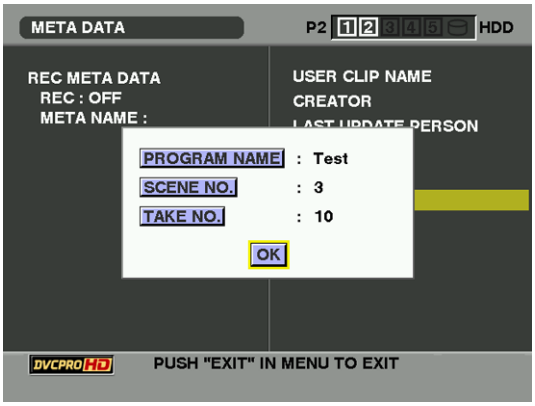

4 While viewing the settings for the metadata, use the cursor buttons to move the pointer to the desired option. Then, press the SET button. A software keyboard screen is displayed, allowing you to modify the setting.

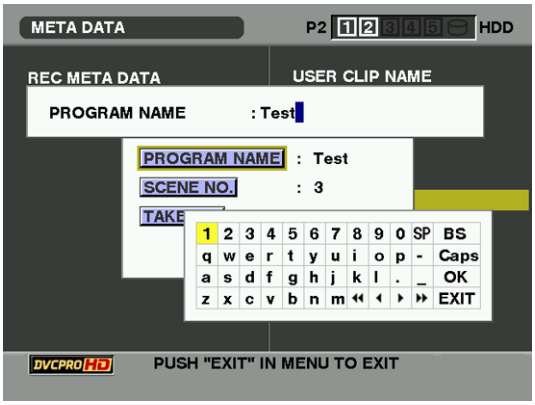

To set whether or not the uploaded metadata is recorded

Set ON/OFF in META DATA → RECORD from the thumbnail menu. The factory setting is OFF.

Selecting the USER CLIP NAME recording method

Select META DATA → USER CLIP NAME from the thumbnail menu to select the recording method. Two options are available: TYPE1 and TYPE2.

● TYPE1 (Factory setting)

	USER CLIP NAME to be recorded
If clip metadata has been read in	Uploaded data
If no clip metadata has been read in or if the setting for recording clip metadata has been turned off	Same as GLOBAL CLIP ID (UMID data)

● TYPE2

	USER CLIP NAME to be recorded
If clip metadata has been read in	Uploaded data + COUNT value*
If no clip metadata has been read in or if the setting for recording clip metadata has been turned off	Same as CLIP NAME

* The COUNT value is indicated as a four-digit number.
The COUNT value is incremented each time a new clip is captured if clip metadata has been read in and TYPE2 has been selected as the recording method.
The COUNT value can be reset using the following procedure.
Select PROPERTY → DEVICE → META DATA from the thumbnail menu, then select USER CLIP NAME to display the menu shown below. Select “COUNT RESET” with the cursor and press the SET button to reset the COUNT value to 1.

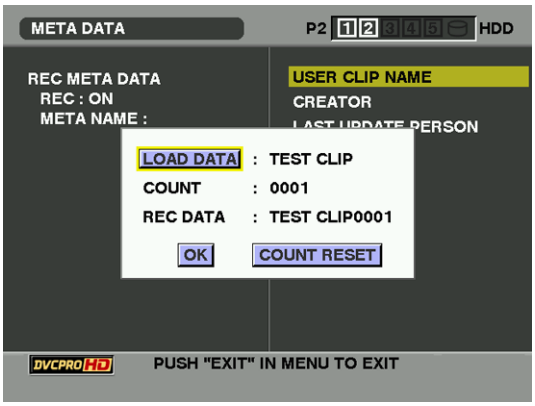

◆Note

When a P2 card with a memory capacity of 8 GB or more is used in camera-recorder and a one-time continuous recording exceeds the prescribed duration (DVCPRO HD and the AVC-Intra 100: about 5 minutes; DVCPRO50 and the AVC-Intra 50: about 10 minutes) or when a one-time recording extends over more than one P2 card, the recording concerned will automatically be undertaken as a separate clip. At this time, each clip will be provided with its own COUNT value.

Example of recording (DVCPRO HD) a clip on one P2 card:

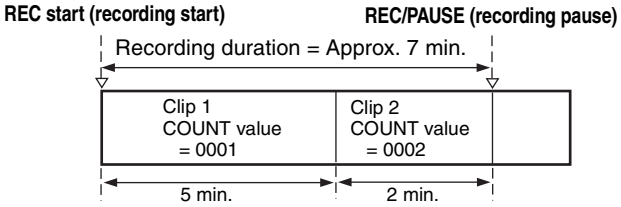

Example of recording a clip on two P2 cards:

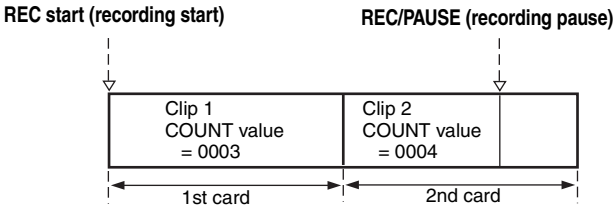

If the clip thumbnails are displayed as shown in the example above or their properties are indicated using a P2 device, the thumbnail and COUNT value of clip 1 will be displayed.

Clear the uploaded metadata

Select META DATA → INITIALIZE from the thumbnail menu, and press the SET button. Select “YES” when the confirmation screen is displayed.

◆Notes

- The setting for the displayed language is available only when the area is set to “NTSC (J)”. For details, refer to [Color TV Standard Settings (Settings for frame frequency)] (page 13).
- Japanese or Chinese characters indicated in English or other characters that cannot be indicated in English will not display properly; they will be indicated as ＊.
- The letters which can be input with AJ-HPX3000 are only the alphanumeric. AJ-HPX3000 cannot input Japanese and Chinese.

Setting of Proxy (optional)

By attaching the video encoder card (AJ-YAX800G, optional) either to the optional slot or Slot 5, it is possible to specify the proxy recording setting.
The video encoder card is not recognized when inserted if the power for the unit is turned ON. Insert the video encoder card after turning off the power for the unit.
Select OPERATION → DEVICE SETUP → PROXY from the thumbnail menu to specify the setting.
For the method of installation and the settings of the video encoder card, refer to the operation manual of the video encoder card.

◆Note

To use the proxy function in 24PN (Native) mode, the FPGA version of the video encoder card firmware must be updated to [B102] or higher. For the method to confirm the FPGA version of the video encoder card firmware, refer to [Video Encoder Card Status Display (optional)] (page 132). For instructions on updating, refer to the P2 support page on the following website.

https://eww.pavc.panasonic.co.jp/pro-av/

Formatting a P2 Card

1 Press the THUMBNAIL button.
The thumbnail screen appears on the LCD monitor.

2 Press the THUMBNAIL MENU button and select OPERATION → FORMAT from thethumbnail menu.
The following screen appears. Select the slot number for the P2 card you want to format.
Select EXIT if formatting is not required.

3 The following screen appears. Use the cursor buttons and the SET button to select YES.

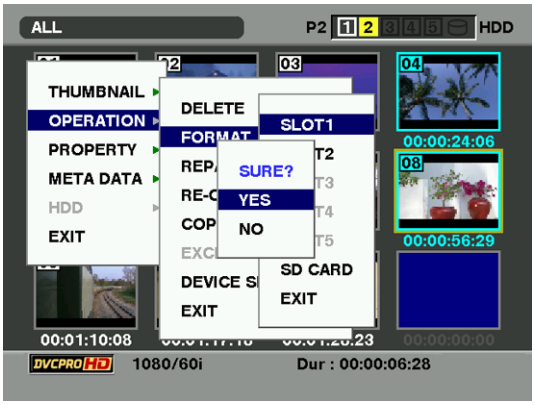

4 The selected P2 card is formatted.

Formatting SD memory cards

SD memory cards can also be formatted from the thumbnail screen. With an SD memory card inserted into the camera-recorder, perform the following operation:

1 Press the THUMBNAIL button.
The thumbnail screen appears on the LCD monitor.

2 Press the THUMBNAIL MENU button and select OPERATION → FORMAT from the thumbnail menu.
The following screen appears. Select “SD CARD”.
Select “EXIT” if formatting is not required.

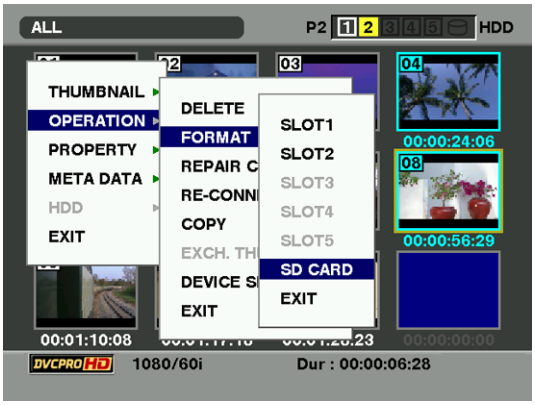

3 The following screen appears. Use the cursor buttons and the SET button to select YES.

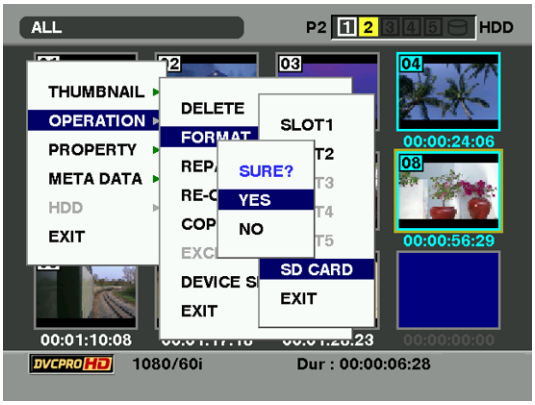

4 The SD memory card is formatted.

◆Note

SD memory cards can also be formatted from the menu screen. For more information, see [To format an SD memory card] (page 84).

Setting the Thumbnail Display Mode

The thumbnail display mode can be customised to suit your preferences.

1 Press the THUMBNAIL button.
The thumbnail screen appears on the LCD monitor.

2 Press the THUMBNAIL MENU button and select THUMBNAIL→SETUP from thethumbnail menu.
The following screen appears.

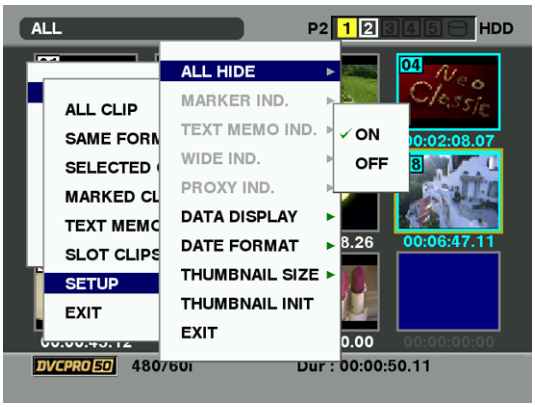

ALL HIDE :

ON： All indicators are not displayed.

OFF： Indication/No indication will be set depending on the following menu. The factory settings are as follows.

MARKER IND. :

Switches the shot mark marker between indication and no indication (ON/OFF). The factory setting is ON (indication).

TEXT MEMO IND. :

Switches the text memo marker between indication and no indication (ON/OFF). The factory setting is ON (indication).

WIDE IND. :

Switches the wide marker between indication and no indication (ON/OFF). The factory setting is ON (indication).

PROXY IND. :

Switches the proxy marker between indication and no indication (ON/OFF). The factory setting is ON (indication).

DATA DISPLAY:

The time display field of the clip offers a choice of Time Code (TC), User Bits (UB), Shooting Time (TIME), Shooting Date (DATE), Shooting Time and Date (Time DATE) or USER CLIP NAME. The factory setting is Time Code.

DATE FORMAT:

You can specify the display order for the shooting date as either Year/Month/Day (YMD), Month/Day/Year (MDY) or Day/Month/Year (DMY). The factory setting is Month/Day/Year. This setting is reflected in the recording date shown in the clip property and the shooting date shown when DATE is selected under the item DATA DISPLAY.

THUMBNAIL SIZE:

For the size of thumbnails displayed on one screen, either LARGE (3 × 2 thumbnails displayed) or NORMAL (4 × 3 thumbnails displayed) can be selected. The factory default value is NORMAL.

THUMBNAIL INIT:

Return the above thumbnail display settings to default. Move the cursor to this option, and press the SET button. Select “YES” when the confirmation screen is displayed.

EXIT:

Returns to the previous menu.

Properties

The clip's properties and the P2 card's status are displayed.
It is possible to edit and rewrite recorded clip metadata while clip properties are displayed.

Clip Property

From the thumbnail menu, select PROPERTY → CLIP PROPERTY. The following screen appears.

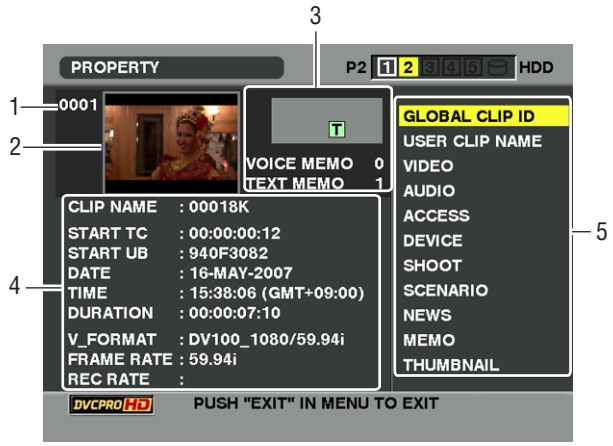

1. Clip Number

2. Thumbnail

3. Clip Information

Indicates the indicators added to the clip and the number of text and voice memos added to the clip.
The mark appears if the clip is recorded on a write-protected P2 card.

◆Note

AJ-HPX3000 is not capable of recording or playing back voice memos.

4. Clip Information

Displays detailed information about the clip.

CLIP NAME:
Display clip names.

START TC:
The time code value at the start of the recording.

START UB:
The user bit value at the start of the recording.

DATE: The date of the recording.

TIME: The time at the start of the recording.

DURATION:
The time length of the clip.

V-FORMAT:
The recording format for the clip.

FRAME RATE:
The frame rate for the playback.

REC RATE:
The recording frame rate is displayed. (This is indicated on the clip that data is recorded in a special way using the camera recorder.)

5. Clip Meta Data

Displays more detailed data about the clip. Use the cursor buttons to move the pointer, and press the SET button to check the detailed content. The underlined items are automatically set during shooting. For more information on displayed metadata, see [Setting of Clip Meta Data] (page 123).

Modification of recorded clip metadata

1 Display the window for detailed clip metadata that you intend to modify in the clip properties window.

2 Place the cursor on the item to be modified using the cursor button. The metadata that can be modified are shown like [CREATOR] in the following figure.

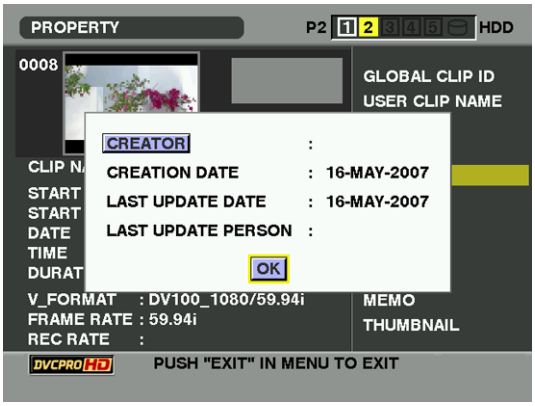

3 Press the SET button
The input window (soft keyboard) for modifying metadata is displayed. Use the keyboard to modify the metadata.

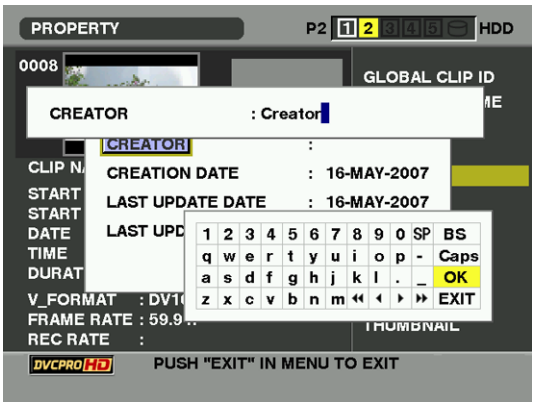

The keyboard operation is the same as [Checking and modifying read metadata] (page 124).

4 Press OK on the keyboard to write the modified metadata on the clip and return to the metadata window.
The input window (soft keyboard) for modifying metadata is displayed. Use the keyboard to modify the metadata.

◆Note

- Deleting only the respective items of LOCATION (recording location data) in SHOOT is not possible. By setting ALTITUDE to empty, other LONGITUDE/ LATITUDE items are collectively deleted.
- The metadata for a clip with the ! incomplete clip indicator cannot be modified. For the clips recorded on multiple P2 cards, modify the metadata while all P2 cards are inserted.
- Any MEMO with 100 characters or more cannot be modified.

P2 Card Status Display

P2 Card Status Display Settings

Select PROPERTY → CARD STATUS from the thumbnail menu to set the desired indication mode (remaining free space or used memory capacity) for the P2 card status display.

1 Press the THUMBNAIL button.
The thumbnail screen appears on the LCD monitor.

2 Press the MENU button and select PROPERTY→ PROPERTY SETUP→P2 CARD CAP from the thumbnail menu.
The following screen appears. Select the P2 card status display settings from the P2 CARD CAP menu option.

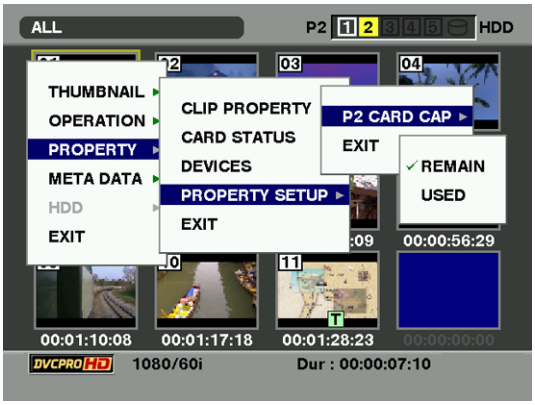

REMAIN:
Show remaining free space on the P2 card as the P2 card status display. (Factory setting)

USED:
Show used memory capacity on the P2 card as the P2 card status display.

Contents of P2 Card Status Display Settings

From the thumbnail menu, select PROPERTY → CARD STATUS. The following screen appears.

When "REMAIN" is selected:

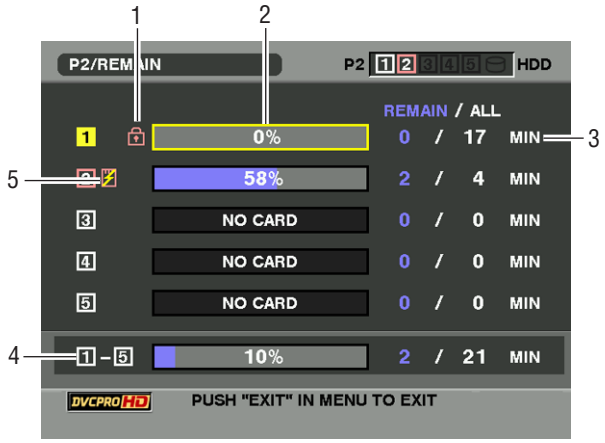

1. **Write-protect Mark**
   The mark appears if the P2 card is write-protected.

2. **P2 Card Status (remaining free space)**
   The remaining memory capacity of the P2 card is indicated by a bar graph and percentage. The bar graph indicator moves to the left as the remaining free space decreases.
   The following indications may appear, depending on the card status:
   FORMAT ERROR:
   An unformatted P2 card is inserted.
   NOT SUPPORTED:
   An unsupported card is inserted in the camera.
   NO CARD:
   P2 cards are not inserted.
   Use the cursor button to place the cursor on the P2 card for data you want to access and press the SET button to display detailed information about the P2 card to check individual information such as the serial number and the user ID.

3. **P2 Card Remaining Capacity/Total Capacity**
   Displays the P2 card remaining capacity and total capacity in minutes. The total of the remaining memory capacity for each P2 card that is displayed may not match the actual total remaining memory capacity for the P2 cards because only the figure in minute is displayed.

4. **Total remaining free space for the slot**
   Displays the total remaining free space for all 5 slots.
   Please note that the remaining capacity of a write-protected P2 card is not included in the total remaining capacity.

5. **Warning symbol**
   When the following P2 card is detected, the symbol is displayed.
   RUN DOWN CARD:
   The volume of data on the card exceeds the limit defined in the standards.
   DIR ENTRY NG CARD:
   The directory structure on the P2 card does not comply with the standards.
   The warning can be confirmed on the P2 card detailed information indication in [2.P2 Card Status (remaining free space)].

When "USED" is selected:

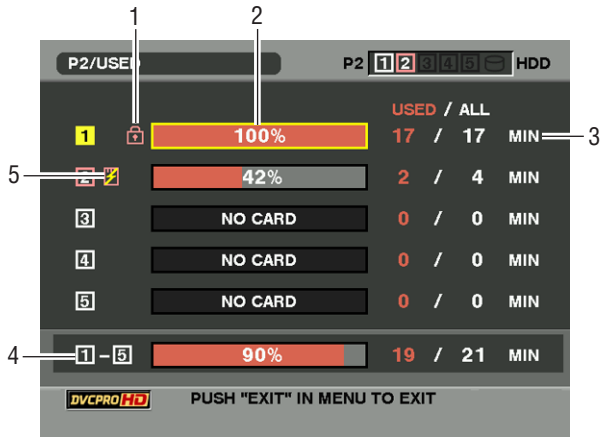

1. **Write-protect Mark**
   The mark appears if the P2 card is write-protected.

2. **P2 Card Status (used memory capacity)**
   The used memory capacity of the P2 card is indicated by a bar graph and a percentage figure. The bar graph indicator moves to the right as the used memory capacity increases.
   The following indications may appear, depending on the card status:
   FORMAT ERROR:
   An unformatted P2 card is inserted.
   NOT SUPPORTED:
   An unsupported card is inserted in the camera.
   NO CARD:
   P2 cards are not inserted.
   Use the cursor button to place the cursor on the P2 card for data you want to access and press the SET button to display detailed information about the P2 card to check individual information such as the serial number and the user ID.

3. **P2 Card memory capacity/Total Capacity**
   Displays the used memory capacity on a P2 card and the total capacity, in minutes. Because fractions are truncated, the figure shown for used memory capacity on a P2 card may differ from the figure for total capacity.
   The used memory capacity of a write-protected P2 card is displayed as 100%.

4. **Total used memory capacity for all slots**
   Displays the total used memory capacity for all 5 slots.

5. **Warning symbol**
   When the following P2 card is detected, the symbol is displayed.
   RUN DOWN CARD:
   The volume of data on the card exceeds the limit defined in the standards.
   DIR ENTRY NG CARD:
   The directory structure on the P2 card does not comply with the standards.
   The warning can be confirmed on the P2 card detailed information indication in [2.P2 Card Status (remaining free space)].

SD memory card Status Display

The status display enables a confirmation of the SD memory card formatted condition, available memory capacity etc.
From the thumbnail menu, select PROPERTY → DEVICES → SD CARD.
If the format is compatible with SD standards, the message **"SD STANDARD: SUPPORTED"** is displayed.
If the format is not compatible with SD standards, the message **"SD STANDARD: NOT SUPPORTED"** is displayed. If this is the case, writing or reading will not be successful. Format the card with the AJ-HPX3000. For more on formatting SD memory cards, see [Formatting SD memory cards] (page 127).

◆Note

The indicated remaining memory capacity on the SD memory card (PROXY REM) can be an index of remaining memory capacity for the Proxy but may differ from the actual remaining capacity. For SD or SDHC cards with Class indications, the recording time may be reduced significantly compared with the actual capacity when images of short recording time are recorded repeatedly. If the remaining memory capacity exceeds 999 min, [999 min] is displayed.
The remaining capacity is displayed only when set to record the Proxy record on the SD memory card. For the setting method, refer to the operation manual of the video encoder card (the optional AJ-YAX800G).

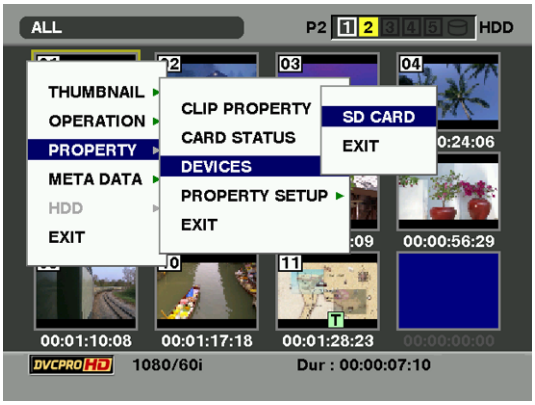

Video Encoder Card Status Display (optional)

Attaching the video encoder card (AJ-YAX800G, optional), select PROPERTY → DEVICES → PROXY from the thumbnail menu.
The slot in which the video encoder card is inserted, and version information is displayed.

Connection with external device

Connection through the DVCPRO connector

Records of signals input to the DVCPRO connector

1 Refer to [32.DVCPRO connector] (page 22) to connect the 1394 cable (DV cable).
Ensure that the signal format of the target device agrees with that of the camera-recorder.

2 Open the <1394 SETTING> on the SYSTEM SETTING page and confirm that the settings in the 1394 IN CH item and the 1394 OUT CH item are set to “AUTO”.

3 Open <SYSTEM MODE> on the SYSTEM SETTING page to set REC MODE to “DVCPRO HD.”

4 In case of input from the IEEE1394 interface, set REC SIGNAL to “1394”.
The REC SIGNAL option must be selected from the <SYSTEM MODE> menu on the SYSTEM SETTING page.

◆Notes

- When the AVC-Intra format is selected and data are recorded, it is impossible to input/output data from the DVCPRO connector.
- When INTERVAL REC is operated, it is impossible to input/output data from the DVCPRO connector.
- When no device is connected to the DVCPRO connector or no signal is being input to the connector, the display window indicates “1394E-90” in the counter section. Input the same signals to the IEEE1394 interface as the format set in SYSTEM MODE and REC MODE in the setting menu. If a different format is used, signals are not properly recorded on P2 cards. When playback signals other than regular×1 (normal speed) playback signals have been input, no guarantees are made for the video and sound recorded or for the video and sound of the EE system. For information about the error codes, see [1394 Error Codes] (page 152).
- The audio signal input will consist of an input signal from DVCPRO connector.
- When the audio signal input from the IEEE1394 interface is 32 kHz/4CH (12 bits), it is recorded as 48 kHz/4CH (16 bits) on the P2 card.
- It is not possible to use the GENLOCK IN connector to achieve synchronization with the external reference signal.
- In SD mode, the thumbnail button is prerssed, thumbnail screen are output to the viewfinder and the MON OUT and VIDEO OUT connectors.
- The signals which are output from the VIDEO OUT connector, MON OUT connector or AUDIO OUT connector differ from the actual input signals. Use them for monitoring purposes.
- The condition indicator character is not shown in the viewfinder screen and the output images.
- The following functions are not available.
  PRE-RECORDING function
  Loop recording
  Interval recording function
  Proxy recording function

Time code and user bits

- When input from the IEEE1394 interface is being received, the time code and/or the user bits input from the TC IN connector cannot be recorded on the P2 card.
- When input from the IEEE1394 interface is being received, the time code output from TC OUT will not be synchronized with the images output from the MON OUT connector.

Timecode and user bits in the subcode (SBC) area

- When input from the IEEE1394 interface is being received, the timecode in the SBC area, which is input from the DVCPRO connector, is recorded on the P2 card by turning the TCG switch to the “F-RUN” position and it will also be output from the TC OUT connector of camera-recorder.
- By turning the TCG switch into the “R-RUN” position, the timecode in the SBC area will be recorded on the P2 card in accordance with the timecode of the clip recorded on the P2 card.
- When recording the user bits input from the DVCPRO connector on the P2 card, open the <TC/UB> screen on the MAIN OPEATION page from the menu and select the “EXT” at UB MODE.

Timecode and user bits in the VAUX area

- When the input from the IEEE1394 interface is being received, regardless of the menu setting and/or the switch position on camera-recorder, the timecode and the user bits in the VAUX area input from the DVCPRO connector are always recorded on the P2 card.

Recording of UMID (Unique Material Identifier) information

- When the input from the IEEE1394 interface is being received, the UMID information input from the DVCPRO connector will be recorded on the P2 card. If there is no UMID information, it will be generated in the unit and recorded.

External device control through DVCPRO connection

The DVCPRO connector can be connected with an external device for recording backup copies to control the start and stop of recording.

1 When connecting the 1394 (DV) cable, see [32.DVCPRO connector] (page 22).
Set the 1394 CONTROL menu option on the 1394 SETTING screen on the SYSTEM SETTING page to BOTH.

2 Through the 1394 CMD SEL menu option, select the type of stop recording command to be received by the external device.

3 Through the REC TALLY menu option on the OPTION MODE screen, select how the recording status of the camera-recorder should be indicated. Note that the recording status of the external device is indicated with a red tally LED.

4 Open <SYSTEM MODE> on the SYSTEM SETTING page to set REC MODE to “DVCPRO HD.”

◆Notes

- When the Fire Store FS-100 is used as external storage, the VITC UB MODE menu option on the TC/UB screen on the MAIN OPERATION page can be set to FRM. RATE to allow the FS-100 to indicate the shooting frame rate of the camera-recorder on its display. It is also possible to add the same USER CLIP NAME of the unit to the record clip of the FS-100.
- Note that when recording a backup with an external device connected to the camera-recorder during REC RUN mode and there is insufficient storage space on the P2 card inserted into the camera-recorder, the time code output from the DVCPRO connector will not advance from that point.
- When the AVC-Intra format or INTERVAL REC mode is selected, it is impossible to control any external devices through the 1394 connection.

Directions for using the DVCPRO connection

- When connecting the 1394 (DV) cable, see [32.DVCPRO connector] (page 22).
- The AV signals may be disrupted by turning the power of the connected devices ON and OFF or by disconnecting and re-connecting the I/F cables.
- It may take several seconds for the system to operate stably when the input signals are switched or operation is transferred from one mode to another.
  Perform recording operation after the system operation has stabilized.
- For recording data using the IEEE1394 interface input selection, or for signals output from the IEEE1394 interface, the AUDIO LEVEL Volume on the side panel is disabled.
- When camera-recorder is controlled through PC application software, etc., take note of the following.
  - The scene-to-scene continuity recording from an arbitrary position on the clip is not possible. Recording will always continue immediately after the latest clip.
  - Software must be used under the condition where the camera-recorder thumbnail screen is closed. The application software may not be able to apply control when the thumbnail screen is open.
- During special playback, video and audio signals which have not been processed as the output signals of the IEEE1394 interface will be output. When these video and audio signals are monitored on another device, they may be at variance from the video and audio signals which are played back by camera-recorder.

Connection with external devices using the USB 2.0 port

Connection with a PC in the USB DEVICE mode

By connecting AJ-HPX3000 with an external PC using USB 2.0, the P2 card connected to AJ-HPX3000 can be used as a mass storage device.

Procedures for establishing a connection with a PC

1 Connect the USB cable to the USB 2.0 port.

◆Notes

- The USB 2.0 cable is not included with the camera-recorder. Please use a commercially available USB 2.0 cable (shield with a ferrite core).
- It is recommended that the USB cable which is within length 3 meters is used.

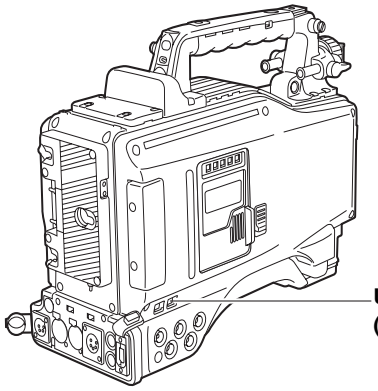

2 Navigate the menu to open the SYSTEM MODE screen on the SYSTEM SETTING page. Then, set the PC MODE SELECT menu option to USB DEV.and the PC MODE option to ON.

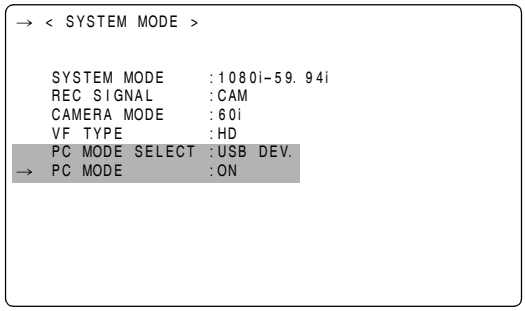

◆Note

The function of the menu option USB may be assigned to a desired user button by using any one of the menu options USER MAIN SW, USER1 SW or USER2 SW.

These options can be found in the USER SW screen, which is accessible from the CAM OPERATION page.

When you establish the USB connection for the first time, install the accessory P2 software for AJ-HPX3000 on the PC. Refer to the Installation Manual for the details.

◆Notes

- A USB driver must be installed on the PC.
- AJ-HPX3000 is only applicable to USB 2.0. Use a personal computer that supports USB 2.0.
- Only one unit at a time must be connected to the PC via USB.
- The P2 card must not be removed when it is connected via USB.
- While a USB connection is established, the P2 card's access LED should not be lit except when access is being carried out.
- When a USB device is active, recording, playback, or navigation through clip thumbnails is disabled.

During a USB connection, the USB LED on the side panel stays illuminated. Also, "USB DEVICE" is displayed in the system information/warning area in the viewfinder.

When the connection is not correctly established, both of these indications blink.

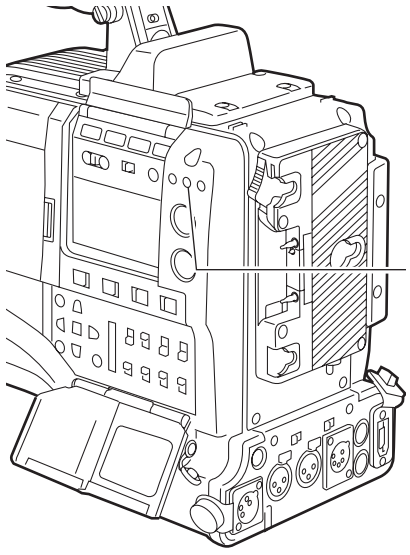

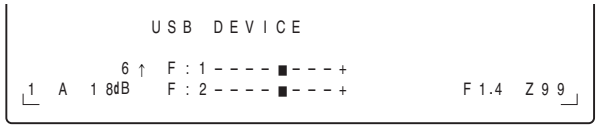

3 There are two ways to terminate the USB mode, as follows:

- Turn the POWER switch of AJ-HPX3000 OFF.
- Set the PC MODE item to "OFF" from the menu operations.

USB HOST mode

In this mode, it is possible to connect to a hard disc drive (HDD), store card data (EXPORT: Refer to "Writing data on a hard disc drive" (page 139)), view thumbnails of stored clips (EXPLORE: Refer to "Viewing hard disc drive information" (page 137)), and write data back to P2 cards (IMPORT: Refer to "Writing data back to P2 cards" (page 139)).

Switching to the USB HOST mode

1 By navigating the menu, set the PC MODE SELECT menu option on the SYSTEM MODE screen to USB HOST, then the PC MODE option to ON. This will place the camera-recorder in USB HOST mode.

- When the camera-recorder is in USB HOST mode, the viewfinder indicates “USB HOST” and the USB LED on the side panel stays illuminated. If the hard disc drive is not properly connected, both indications blink.
- When a user button is assigned the PC MODE on/off switching capability, you can press that user button to switch between the normal and USB HOST modes. For information about how to assign functions to the user buttons, see [Assigning Functions to USER MAIN, USER1 and USER2 Buttons] (page 51).

2 Press the THUMBNAIL button to go to the thumbnail screen. Check to see that the screen indicates “USB HOST” in the lower right corner. When a hard disc drive is connected, the HDD indication in the upper right corner stays illuminated. However, if this indicator illuminates red, it means that the hard disk drive cannot be copied. Confirm the hard disk drive type. For information about the HDD indication, see [Thumbnail Screen] (page 114).

USB HOST display

◆Note

In USB HOST mode, clips on P2 cards can be displayed but video from the camera or an external device cannot be recorded. Clips written to a hard disc must be written back to a P2 card before it can be played back. For information about how to write clips back to P2 cards, see [Writing data back to P2 cards] (page 139).

To return to normal mode from USB HOST mode, turn OFF the PC MODE item or press the USER button so that the PC MODE ON/OFF function is assigned to a state where the thumbnail screen is closed.

Using the USB host mode

Usable hard disc drives

- Hard disc drives connectable via USB 2.0
- P2 STORE (AJ-PCS060G)

◆Notes

- While the USB HOST mode supports USB bus power (5V, 0.5 A), some hard disc drives may not activate. If this is the case, power must be supplied in a different way.
- Do not connect more than one drive even through a hub or any other device.
  Even with devices other than a hard disk drive, do not connect to the drive together with the hard disk drive through a hub.
- The unit does not support a hard disk drive of 2 TB (2048 GB) or more.

Viewing hard disc drive information

You can view the information on the hard disc drive connected via USB 2.0 with the following steps.

1 Switch the mode to USB HOST. For more information, see [Switching to the USB HOST mode] (page 136).

2 Connect the hard disc drive to the camera-recorder via USB 2.0.

3 Press the thumbnail button to display the thumbnail screen.

4 Press the MENU button and select HDD → EXPLORE from the thumbnail menu. The screen provides the information about the hard disc drive.

For Type S or P2 STORE

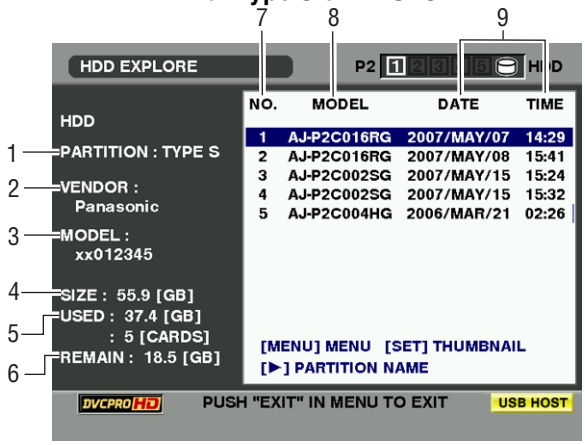

↓ **Press the set button.**

For the FAT

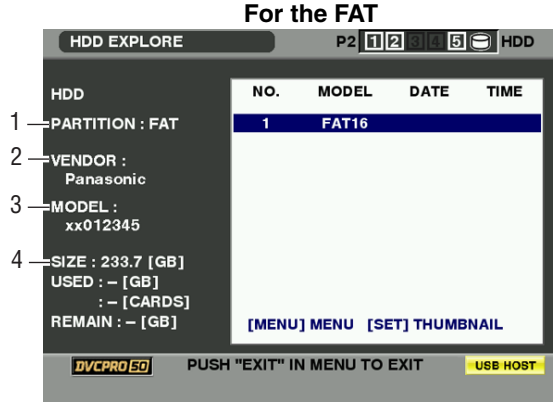

1. PARTITION

This section indicates the type of the hard disc drive. The available functions depend on the type of hard disc drive.

HDD type	Feature	Available functions
TYPE S	A special format that allows high-speed writing and writing back on a card-by-card basis. A drive formatted with the camera-recorder uses this format.	Thumbnail viewing, writing and writing back on a card basis, writing back on a clip basis, and formatting
P2 STORE	P2 STORE (AJ-PCS060G). No writing can be performed.	Thumbnail viewing, writing back on a card basis, and writing back on a clip basis
FAT	For a hard disc drive with the first primary partition formatted in FAT 16 or 32, as seen on personal computers, etc., which requires a CONTENTS directory at its root.	Thumbnail viewing, reading on a clip basis, and formatting *Once formatted, the hard disc drive can be treated as a TYPE-S HDD.
OTHER	Hard disc drives not described above. * They are hard disc drives that have no CONTENTS directory or use the NTFS and any other file system instead of FAT 16 or 32.	Formatting * Once formatted, they can be treated as a TYPE-S HDD.

2. VENDOR

This section indicates the vendor for the hard disc drive.

3. MODEL

This section indicates the model of the hard disc drive.

4. SIZE

This section indicates the total storage on the hard disc drive.

5. USED

This section indicates the used space on the hard disc drive (in GB) and the number of P2 cards in use.

6. REMAIN

This section indicates the remaining free space on the hard disc drive in GB.

7. PARTITION

This section indicates the partition number (one P2 card is used as a unit) on the hard disc drive.

◆Note

The screen indicates up to 10 partitions. When the number of partitions exceeds 10, scroll down the indication with the cursor button (▽) to view the hidden partitions.

8. MODEL

This section indicates the model of the P2 card that originally contained data on the partition.

◆Note

Press the cursor button (▷) to switch to the PARTITION NAME. Press the [◁] button to return to the original model name display.

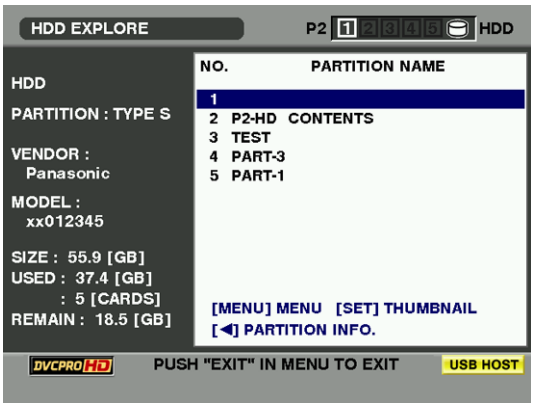

Enter the PARTITION NAME from the software keyboard by selecting [CHANGE PARTITION NAME] in the OPERATION MENU while the thumbnail of the hard disk drive is displayed. (Max. 20 characters)

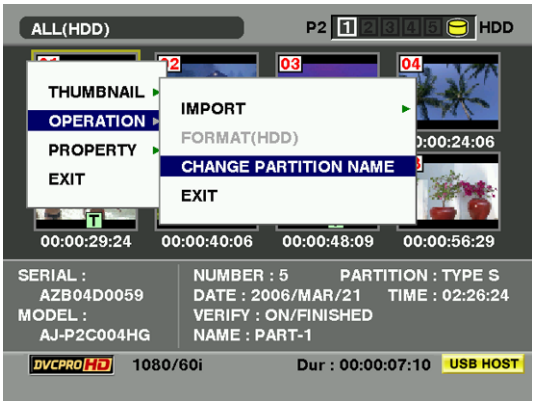

9. DATE/TIME

This section indicates the date and time the data on the partition was recorded.

10. SERIAL

This section indicates the serial number of the P2 card that originally contained the data on the partition.

11. VERIFY

This section indicates the verification setting and results at the time the data on the partition was recorded.

ON:FINISHED :
Verification was performed and the results agreed.

ON:FAILED :
Verification was performed and the results did not agree.

OFF :
No verification was performed.

- - - :
No verification information is available.

◆Notes

- Even for a FAT-type hard disc drive, the 1001st or later clips are not shown.
- For a FAT-formatted hard disc drive, the information about only the first partition is shown.
- For a P2 STORE (AJ-PCS060G) that has an invalid partition, that partition information is shown in gray.

12. NAME

This section indicates the PARTITION NAME.

Formatting a hard disc drive

1 Switch the mode to USB HOST.
For more information, see [Switching to the USB HOST mode] (page 136).

2 Connect the hard disc drive via USB.

3 Press the thumbnail button to display the thumbnail screen.

4 Press the MENU button and select HDD → EXPLORE from the thumbnail menu. The display provides a screen that shows the information about the hard disc drive.

5 From the menu, select OPERATION → FORMAT (HDD) and select YES using the cursor buttons and SET button. Then, the confirmation message is displayed again. Select YES.

6 The camera-recorder starts formatting the hard disc drive. Once formatted, the hard disc drive can be treated as a TYPE-S HDD.

◆Note

Formatting a hard disc drive erases all contents of it. Note that you cannot erase the contents of certain partitions by specifying them.

Writing data on a hard disc drive

1 Switch the mode to USB HOST. For more information, see [Switching to the USB HOST mode] (page 136).

2 Connect a hard disc drive via USB.
A hard disc drive that has not been formatted with the camera-recorder must be formatted as directed in [Formatting a hard disc drive].

3 Insert a P2 card.

4 Press the thumbnail button to display the thumbnail screen.

5 Press the MENU button and select HDD > EXPLORE from the thumbnail menu. Then, specify the slot that contains the P2 card bearing the data to be written to the hard disc drive.

6 Select YES to start writing.
When the data is being written, a progress bar is displayed. To discontinue writing, press the SET button and select YES instead of cancellation confirmation.

◆Notes
- To disable verification at the time of writing, select HDD → SETUP from the thumbnail menu and set the option VERIFY to OFF. This speeds up writing without verifying data writing.
- Select “ALL SLOT” to write data collectively onto all P2 cards currently inserted in the unit to the hard disk drive.

7 When the writing is completed, the message “COPY COMPLETED!” is displayed.

◆Notes
- For a Type-S hard disc drive, data can be written on a card basis. The data on up to 23 P2 cards can be stored on the hard disc drive. The data set on each P2 card is recognized as a separate drive by the PC.
- If data on a P2 card that contains a defective clip must be written to a hard disc drive, then we recommend fixing that clip before copying the data.
- When the process is discontinued during verification, the data on the P2 card has been written to the hard disc drive.

Writing data back to P2 cards

You can select clips on the hard disc drive to be written back to P2 cards.

1 Switch the mode to USB HOST. For more information, see [Switching to the USB HOST mode] (page 136).

2 Connect a hard disc drive via USB.

3 Insert the target P2 card in a slot.

4 Press the MENU button and select HDD → EXPLORE from the thumbnail menu. Move to the appropriate partition and select it with the SET button.

5 From among the thumbnails, select the clips to be written to the P2 card.

6 Press the MENU button and select OPERATION → IMPORT → SELECTED CLIPS. Then, specify the slot that contains the target P2 card.

7 Select YES to start writing data back to the P2 card.

8 When the writing is completed, the message “COPY COMPLETED!” is displayed.

◆Note
When only selected files are written, no verification is performed.

For a Type-S or P2 STORE hard disc drive, you have the choice of writing data on a card basis. The target P2 cards must be preformatted.

1 Switch the mode to USB HOST. For more information, see [Switching to the USB HOST mode] (page 136).

2 Connect a hard disc drive via USB.

3 Insert the target P2 cards in slots.

4 Press the MENU button and select HDD → EXPLORE. Then, move to the appropriate partition and select it with the SET button.

5 From the thumbnail menu, select OPERATION → IMPORT → ALL. Then, specify the slots that contain the empty target P2 cards.

6 Select YES to start writing data to the cards.

<For your information>
To disable verification during writing, select HDD → SETUP from the thumbnail menu and set the option VERIFY to OFF. This speeds up writing without verifying data writing.

7 When the writing is completed, the message “COPY COMPLETED!” is displayed.

◆**Note**

If a clip is written back to a P2 card different from the original card that contained that clip, then the clip may be incomplete. If this is the case, reconnect the clip. For more information, see [Reconnection of Incomplete Clips] (page 122).

Direction for using a hard disc drive

- A hard disc drive must be used under the following conditions:
  - It must meet the operating requirements (e.g. temperature).
  - It must not be placed in an instable place or a place exposed to vibrations.
- Some hard disc drives do not operate properly.
- Some hard disk drives with the SATA (Serial ATA) interface or the PATA (Parallel ATA) interface connected by a USB conversion cable may not be recognized.
- When copying data, a hard disc drive must have sufficient free space.
- Do not remove the cable or the target P2 card or turn off the camera-recorder or hard disc drive during formatting or copying. Doing so requires the camera-recorder and the hard disc drive to be reactivated.
- Since hard disc drives are high precision devices, there is a high possibility that they may become incapable of writing data depending on the conditions of use.
- **Take note that we will not be liable for loss of data caused by failed hard disc drives or any other problem as well as direct or indirect damages resulting from the loss of data.**
- We do not guarantee that hard disc drives will operate properly with the camera-recorder or that the data on them will be properly retained if data copied to them from the camera-recorder has been replaced with other data using a PC.
- By using the drive mount converter distributed on the following URL, the hard disk drive can be mounted in the designated folder when connected.

  https://eww.pavc.panasonic.co.jp/pro-av/

Connection using the SDI IN connector (when AJ-YA350AG attached)

1 Confirm that the HD/SD-SDI input board (AJ-YA350AG: optional accessory) is attached to the unit and that the wires are connected properly. For details, refer to the installation manual for the AJ-YA350AG.

2 Confirm that the connected device has the same signal format as camera-recorder.

3 When signals are input from the SDI IN connector, set the REC SIGNAL in the setting menu to “SDI”. The REC SIGNAL item will be selected from <SYSTEM MODE> on the SYSTEM SETTING page.

◆**Notes**

- If the HD/SD-SDI input board is not attached, REC SIGNAL cannot be set to "SDI".
- When nothing is connected to the SDI IN connector or there is no input signal, images to be recorded will be black and no sound will be recorded. Input the same signals as the format set in the SYSTEM MODE item in the setting menu through the SDI IN connector. If the formats are different, data will not be properly recorded on the P2 card.
- Note the following points when the REC SIGNAL of the setting menu is set to “SDI”.
  - Audio signals are input from the SDI IN connector.
  - Audio signals must be input synchronized with video images. Data will be recorded as 48 kHz/4CH (16 bit) on a P2 card.
  - When the REC SIGNAL item is set to “SDI”, signals input from the GENLOCK IN connector are disabled even if nothing is connected to the SDI IN connector. Please note that there is a delay between video images and voice signals when the unit is used on a system synchronized with the reference.
- UMID information, time code and user bits cannot be recorded on a P2 card using the SDI IN connector.
- When the HD/SD SDI input board (AJ-YA350AG) is installed, the SDI OUT/IN (option) connector becomes the SDI IN connector and SDI OUT signals are not output.
  SDI OUT/IN switching is not performed automatically.

Maintenance and Inspections

Inspections Before Shooting

Make sure you check that the system is operating normally before embarking on a shoot. We recommend using a color video monitor to check the image.

Preparing for Inspections

1 Mount a charged battery pack.

2 Turn the power switch ON and check that 5 or more BATT indication marks appear.

- If fewer than 5 BATT indication marks appear, replace the battery with a fully-charged battery.

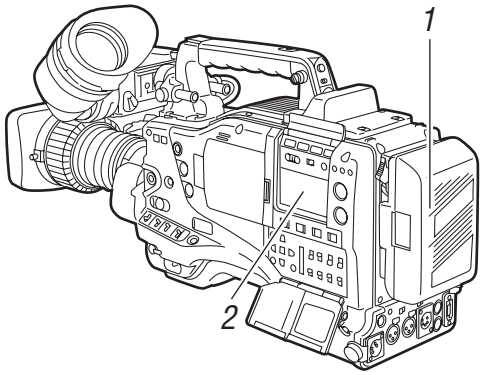

3 Insert a P2 card into the card slot and close the slide cover.
Confirm that the P2 card access LED for the inserted card slot lights up in orange. If P2 cards are inserted into multiple card slots, only the P2 card access LED for the first-inserted P2 card lights up in orange. Then, the other P2 card access LEDs light up in green when P2 cards are inserted.
If the access LED for the P2 card slot in which a P2 card is inserted keeps blinking in green, or if there is no display, recording is not possible on that particular P2 card.

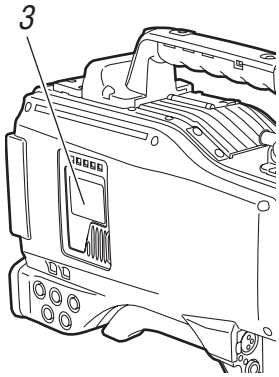

Inspecting the Camera Unit

1 Set the zoom to electric zoom mode and check the zoom operation.
Check that the image changes to telephoto and wide angle.

2 Set the zoom to manual zoom mode and check the zoom operation.
Turn the manual zoom lever to check that the image changes to telephoto and wide angle.

3 Set the iris to automatic adjustment mode and aim the lens at objects with different degrees of brightness, to check that the automatic iris adjustment operates normally.

4 Set the iris to manual adjustment mode and turn the iris ring, to check the manual iris adjustment.

5 While holding down the instant iris automatic adjustment button, aim the lens at objects with different degrees of brightness, to check that the instant iris automatic adjustment operates properly.

6 Return the iris to automatic adjustment mode and change the GAIN switch setting to L, M, and H, to check the following items:

- The iris is adjusted for objects with the same brightness according to the switch setting.
- The gain value displayed on the viewfinder screen changes according to the switch setting.

7 When a lens with an extender is mounted, set the extender to the operating position to check that the extender operates properly.

Inspecting the Memory Recording Functions

Make sure you successively carry out the inspections from [1. Inspecting the P2 Card Recording] to [4. Inspecting the Earphone and Speaker].

1. Inspecting the P2 Card Recording

1. Check on the display inside the viewfinder that the remaining P2 card recording capacity is sufficient. Please refer to [P2 Card Remaining Free Space/ capacity Indication] (page 75) for information about P2 card remaining recording capacity.
2. Set the TCG switch to [R-RUN].
3. Set the DISPLAY switch to [TC].
4. Press the camera's REC START/STOP button to check the following items:
   - The P2 access LED blinks in orange.
   - The REC lamp inside the viewfinder lights up.
   - System warnings do not appear inside the viewfinder.
5. Press the camera's REC START/STOP button again. This step confirms that the P2 access LED is on and showing orange, and the REC lamp in the viewfinder is turned off.
6. Using the REC button on the handle, repeat Steps *4* to *5* to check the same operation. Check the VTR button on the lens in the same way.
7. Press the LIGHT button to check that the screen brightness in the display window increases.
8. Press the PLAY button to check that the clip that has just been shot is played back from the beginning. Check that recording and playback operate properly.
9. When multiple P2 cards are inserted into the P2 card slots, press the USER MAIN button to select the P2 card used for recording.
   Repeat the operations in Steps *4* to *5* and *8* to check that recording and playback operate properly.

2. Inspecting the Audio Level Automatic Adjustment

1. Set the AUDIO SELECT CH1 and CH2 switches to [AUTO].
2. Set the AUDIO IN CH1 and CH2 switches to [FRONT].
3. Aim the microphone connected to the MIC IN jack at an appropriate sound source. Then, check that the level displays for both CH1 and CH2 change according to the sound level.

3. Inspecting the Audio Level Manual Adjustment

1. Set the AUDIO IN CH1 and CH2 switches to [FRONT].
2. Set the AUDIO SELECT CH1 and CH2 switches to [MAN].
3. Turn the AUDIO LEVEL CH1 and CH2 controls. Check that the level display increases when the controls are turned to the right.

4. Inspecting the Earphone and Speaker

1. Turn the MONITOR control to check that the speaker volume changes.
2. Connect an earphone to the PHONES jack. Check that the speaker is turned off and the microphone sound can be heard from the earphone.
3. Turn the MONITOR control to check that the earphone volume changes.

5. Inspection for Using an External Microphone

1. Connect an external microphone to the AUDIO IN CH1 and CH2 connectors.
2. Set the AUDIO IN CH1 and CH2 switches to [REAR].
3. Set the LINE/MIC/+48V selector switches on the rear panel to [MIC] or [+48V], depending on the power supply type of the external microphone.

   MIC: For a microphone with internal power supply.
   +48V: For a microphone with external power supply.
4. Aim the microphone at a sound source. Then check that the audio level meter in the display window and the audio level display inside the viewfinder change according to the sound level.
   The channels can also be checked separately by connecting a single microphone to each channel.

6. Inspection of the clock, time code, and user bits

1 Set the user's bit as required.
Please refer to [Setting of the user bits] (page 57) for the setting procedures.

2 Set the time code.
Please refer to [Setting the Time Code] (page 60) for the setting procedures.

3 Set the TCG switch to [R-RUN].

4 Press the REC START/STOP button.
Check that the counter display number changes as recording progresses.

5 Press the REC START/STOP button again.
Check that recording stops and the counter display number stops changing.

6 Set the TCG switch to [F-RUN].
Check that the counter display number changes regardless of recording status.

7 Set the DISPLAY switch to [UB].
Each time the HOLD button is pressed, make sure that the displayed value changes in the following sequence: VTCG → DATE → TIME → No display (time zone) → TCG; and also verify that the displayed value is correct.
If DATE, TIME, or time zone is not correct, refer to [Setting the Internal Clock's Date and Time] (page 59) for guidance on setting the correct values.

◆**Note**
Note that date and time data set for DATE, TIME, and time zone is recorded in clips, and affects the playback sequence, etc. at the time of thumbnail manipulations.

Maintenance

Cleaning Inside the Viewfinder

- Do not use thinner or other solvents to remove dirt.
- Wipe the lens with a commercially available lens cleaner.
- Do not wipe the mirror. If dirt or rubbish is sticking on the mirror, remove it with a commercially available air blower.

Phenomenon Inherent to CCD Cameras

Smears
Smears may appear when shooting an object with very high brightness.
This phenomenon becomes more obvious as the electronic shutter speed becomes faster.

Replacing the Backup Battery

The camera is shipped from the factory with a backup battery already mounted.
When the battery runs out, the [BACK UP BATT EMPTY] display appears on the viewfinder screen for 5 seconds after the power switch is turned ON.
The internal clock stops operating when the battery runs out. Also, the TCG time code value returns to [00:00:00:00], and the time code backup is disabled. The battery must be replaced.
Please consult your distributor for replacement with a new battery (CR2032).
The backup battery is visible when the panel on the LCD monitor side is removed (right side when viewed from the front).

◆**Note**
Please contact the store where you purchased the camera when replacing the battery.

Connector Signals

DC IN	
1	GND
2	NC
3	NC
4	+12V

Matsushita part number K1AA104H0038
Maker part number HA16RX-4P（SW1）
(Hirose Denki)

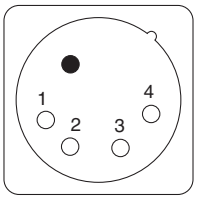

◆Note

Ensure that the polarities are used correctly for a power supply from an external source.

DC OUT	
1	GND
2	R TALLY (Open collector)
3	REC START SW
4	+12V OUT (Max. 1.5 A)

Matsushita part number K1AY104J0001
Maker part number HR10A-7R-4SC(73)
(Hirose Denki)

Connector at the cable side
Maker part number HR10A-7P-4P(73)
(Hirose Denki)

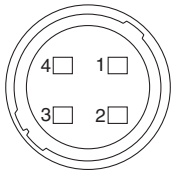

FRONT MIC IN	
1	GND
2	L CH IN (H)
3	L CH IN (C)
4	R CH IN (H)
5	R CH IN (C)

Matsushita part number K1AB105B0002
Maker part number NC5FBH
(NEUTRIK)

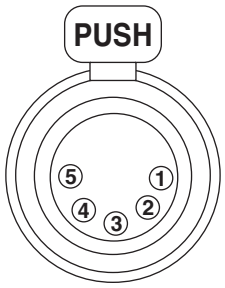

AUDIO IN	
1	GND
2	AUDIO IN(H)
3	AUDIO IN(C)

Matsushita part number K1AB103A0011
Maker part number HA16PRM-3SG
(Hirose Denki)

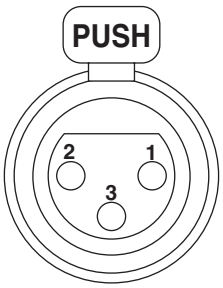

AUDIO OUT	
1	GND
2	L CH OUT (H)
3	L CH OUT (C)
4	R CH OUT (H)
5	R CH OUT (C)

Matsushita part number K1AA105H0016
Maker part number HA16RD-5P(76)
(Hirose Denki)

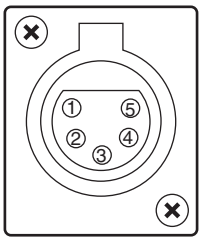

REMOTE		
1	CAM DATA (H)	Data from the camera to the remote control (H)
2	CAM DATA (C)	Data from the camera to the remote control (C)
3	CAM CONT (H)	Control signals from the remote control to the camera (H)
4	CAM CONT (C)	Control signals from the remote control to the camera (C)
5	RC-ON	Identification signals of the remote control Low: ON
6	RC VIDEO OUT	Video signals output to the remote control
7	RC VIDEO GND	GND of the video signals to the remote control
8	NC	Not used
9	UNREG 12V	DC +12 V power supply (AJ-RC10G: Max. 0.75 A)
10	GND	GND

Matsushita part number K1AY110JA001
Maker part number HR10A-10R-10SC(71)
(Hirose Denki)

Connector at the cable side
Maker part number HR10A-10P-10P(73)
(Hirose Denki)

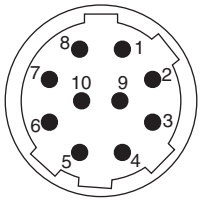

VF		
1	UNREG-12V	DC +12 V power supply (AJ-HVF21G: About 0.35 A)
2	UNREG-12V	DC +12 V power supply
3	A9.0V	DC +9 V power supply (not used)
4	VF-PB-GND	GND for the viewfinder P_B signals
5	VF-PR-GND	GND for the viewfinder P_R signals
6	VF-Y	Viewfinder Y signals output
7	VF-Y-GND	GND for the viewfinder Y signals
8	VF-CLK	Serial data clock pulse signals
9	VF-WR	Pulse signals for reading serial-parallel conversion data
10	VF-DATA	Serial data signals for serial-parallel conversion
11	UNREG-GND	GND
12	ZEBRA-SW	ON/OFF of the zebra signals
13	PEAKING	Control of the peaking (not used)
14	SPARE	Standby (not used)
15	VF-PR	Viewfinder P_R signal output
16	VF-PB	Viewfinder P_B signal output
17	MARKER-SW	ON/OFF of the marker (not used)
18	FRONT-VR	FRONT AUDIO LEVEL adjustment (not used)
19	VR-GND	GND for the FRONT AUDIO LEVEL (not used)
20	UNREG-GND	GND

Matsushita part number K1AB120H0001
Maker part number HR12-14RA-20SC
(Hirose Denki)

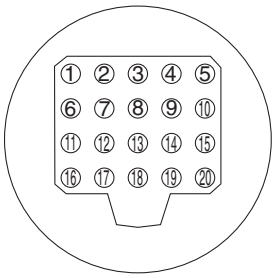

◆Caution
Total amount of current from the respective connectors for DC OUT, REMOTE, VF, and LENS should not exceed 2.5 A.

LENS		
1	RET-SW	ON/OFF of the return video RETURN ON: GND RETURN OFF: OPEN
2	REC-START/STOP	Control for recording start/stop 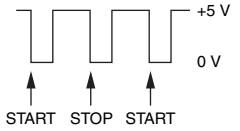
3	GND	GND
4	IRIS-AUTO	ON/OFF of the forced iris servo SERVO ON: +5V±0.5V SERVO OFF: OPEN
5	IRIS-CONT	Control output for the lens iris F2.8: –6.2 V, F16: +3.4 V, CLOSE: +2.5 V
6	UNREG-12V	+12V power supply for the lens (Max. 1.5 A)
7	IRIS-POSI	Iris position signals 3.4 V (F16) to +6.2 V (F2.8)
8	IRIS-G-MAX	IRIS REMOTE/LOCAL (AUTO) signals REMOTE: +5V±0.5V LOCAL (AUTO): GND
9	EXT-POSI	ON/OFF of the built-in extender EXTENDER ON: GND EXTENDER OFF:OPEN
10	ZOOM-POSI	Zoom position signals
11	FOCUS-POSI	Focus position signal
12	SPARE	Standby (not used)

Matsushita part number K1AY112JA001
Maker part number HR10A-10R-12SC(71)
(Hirose Denki)

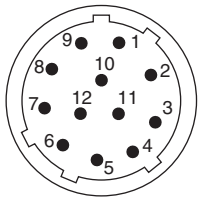

GPS		
1	GPS TXA	Transmission data from the GPS unit to the camera
2	GPS RXA	Transmission data from the camera to the GPS unit
3	GPS VBAT	Backup power supply connector for the GPS unit (DC+3.3 V)
4	REC START SW	Control signals of REC start/stop
5	GPS VCC	Power supply connector for the GPS unit (DC+3.3 V)
6	GPS GND	GND

Matsushita part number K1AY106J0001
Maker part number HR10A-7R-6SC(73)
(Hirose Denki)

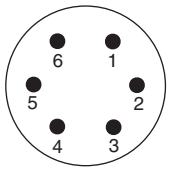

Unislot Interface		
1	CH-1 SHIELD	GND
2	CH-1 HOT	Audio input from the wireless receiver: HOT
3	CH-1 COLD	Audio input from the wireless receiver: COLD
4	GND	GND
5	+12V UNREG	Power supply to the wireless receiver
6	RX ON	Power supply remote output to the wireless receiver
7	RF WARN	RF warning input from the wireless receiver
8	RM5	Not used
9	RM4	Not used
10	SPARE 1	Not used
11	SPARE 2	Not used
12	EXT CLK	Not used
13	CLK SHIELD	Not used
14	CH-2 SHIELD	Not used
15	CH-2 HOT	Not used
16	CH-2 COLD	Not used
17	+5.6V	Power supply to the wireless receiver
18	VIDEO OUT	Not used
19	VIDEO RET	Not used
20	VIDEO EN	Not used
21	RM 1 (RM CLK)	Not used
22	RM 2 (RM DATA)	Not used
23	RM 3 (RM WR)	Not used
24	RM +5V	Not used
25	RM GND	Not used

Matsushita part number K1GB25A00010
Maker part number HDBB-25S(05)
(Hirose Denki)

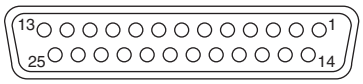

Warning System

Warning Description Tables

If a problem is detected immediately after the power is turned on, or during operation, this will be indicated by the WARNING lamp, lamps inside the viewfinder and a warning tone.

◆Note

The WARNING lamp has the highest priority, followed by the tally lamp, and then the warning tone. When multiple errors occur simultaneously a higher priority indication will be triggered. The [WIRELESS RF], however, may not be indicated, depending on the menu setting.

1. System Errors

Display window indication	The error code lights up.
WARNING lamp	Blinks 4 times per second.
Tally lamp	Blinks 4 times per second.
Viewfinder	The SYSTEM ERROR indication and the error code light up.
Warning tone	Beeps continuously.
Warning description	An error in the reference signal or the communication.
Recording/ playback operation	The operation stops.
Countermeasures	Please confirm [Error Codes] (page 152) and consult your distributor.

2. Card removal error

Display window indication	Error code E-30 blinks.
WARNING lamp	Blinks 4 times per second.
Tally lamp	Blinks 4 times per second.
Viewfinder	The “TURN POWER OFF” indicator lights up.
Warning tone	Continues to beep.
Warning description	The P2 card being accessed has been removed, resulting in an error in the internal memory of the camera-recorder.
Recording/ playback operation	Cannot be performed.
Countermeasures	Turn off the power to the camera-recorder. If there is an error in a clip on the removed P2 card, repair the clip.

3. Battery Empty

Display window indication	All 7 bar indicators for battery remaining capacity start blinking.
WARNING lamp	Lights up.
Tally lamp	Blinks once per second.
Viewfinder	The BATT LED lights up.
Warning tone	Beeps continuously.
Warning description	The battery has run out.
Recording/ playback operation	The operation stops.
Countermeasures	Replace the battery.

4. Write-protect

Display window indication	All 7 bar indicators for remaining MEDIA capacity start blinking.
WARNING lamp	This lamp will illuminate continuously until an operation is made after recording.
Tally lamp	This lamp will flash 4 times every second until an operation is made after recording.
Viewfinder	The WP indicator lights up.
Warning tone	This tone will sound continuously until an operation is made after recording.
Warning description	The inserted P2 cards are write-protected.
Recording/ playback operation	Recording is disabled.
Countermeasures	Disable the write-protect or replace the P2 card.

5. P2 Card Fully Recorded

Display window indication	All 7 bar indicators for remaining MEDIA capacity start blinking.
WARNING lamp	This lamp will illuminate continuously until an operation is made after recording.
Tally lamp	This lamp will flash 4 times every second until an operation is made after recording.
Viewfinder	The END indicator blinks.
Warning tone	This tone will sound continuously until an operation is made after recording.
Warning description	The P2 cards are recorded to maximum capacity.
Recording/ playback operation	The recording stops.
Countermeasures	Delete the clips in the P2 card or insert a new P2 card.

6. Image Sequence Error (24P, 30P, 25P)

Display window indication	“E-40” appears in the time code display field.
WARNING lamp	Blinks 4 times per second.
Tally lamp	Blinks 4 times per second while recording continues.
Viewfinder	The REC WARNING indicator lights up.
Warning tone	Beeps 4 times per second while recording continues.
Warning description	There are abnormal conditions in the image sequence of the 24P, 30P, or 25P mode.
Recording/ playback operation	Images can be recorded and played back, but some frames may be dropped or the sequences of TC and UB may shift.
Countermeasures	Confirm the recording/playback operation after turning OFF the power supply once and then turning it on again. If the error is not corrected after executing this procedure, contact the dealer.

7. Recording Error

Display window indication	“00:00:00:11” appears in the time code display field. Even after recording is stopped, this display continues to blink until the next operation is performed.
WARNING lamp	Blinks 4 times per second while recording continues.
Tally lamp	Blinks 4 times per second while recording continues.
Viewfinder	The REC WARNING indicator lights up.
Warning tone	Beeps 4 times per second while recording continues.
Warning description	This indicates a failure either in the P2 card recording or the recording circuit. This is displayed when attempting to record clips where the total quantity exceeds the upper limit (1000 pieces) for a single P2 card.
Recording/ playback operation	The recording may stop or continue.
Countermeasures	Restart recording. Or, turn the power OFF and turn it ON again, before starting recording.

8. Low Wireless Signal Reception

Display window indication	No display.
WARNING lamp	Blinks 4 times per second. (During pause and recording)
Tally lamp	Blinks 4 times per second while recording continues.
Viewfinder	The WIRELESS RF indicator lights up while recording continues.
Warning tone	Beeps 4 times per second while recording continues.
Warning description	This error indicates poor wireless audio reception conditions.
Recording/ playback operation	Continues to operate without receiving the wireless microphone signal.
Countermeasures	Check the microphone power supply and the reception status of the wireless receiver.

9. 1394 Error

Display window indication	The 1394 E-∗∗ indicator in the display window blinks. For more information, see [1394 Error Codes] (page 152).
WARNING lamp	Blinks 4 times per second while the WARNING lamp recording is continuing.
Tally lamp	Blinks 4 times per second while the TALLY LAMP recording is continuing.
Viewfinder	In the case of Error Code 92, "1394 INITIAL ERROR" indicator lights up (during pause and recording) For Error Codes other than Error Code 92, or if REC SIGNAL is set to "1394", no error is displayed in the viewfinder.
Warning tone	Beeps 4 times per second while ALARM recording is continuing.
Warning description	This indicates a failure of the DVCPRO connector.
Recording/ playback operation	The operation continues, but input signals to the DVCPRO connector are abnormal. For more information, see [1394 Error Codes] (page 152).
Countermeasures	Check the connection between the IEEE1394 cable and the DVCPRO connector, settings of any external device and menus, and the turn on the power again. If the warning indication is still illuminated, confirm the "1394 Error Codes" (page 152), and consult your distributor.

10. Battery Nearly Empty

Display window indication	One of the bars in the battery remaining indicator starts blinking.
WARNING lamp	Blinks once per second.
Tally lamp	Blinks once per second.
Viewfinder	The BATT LED blinks.
Warning tone	Beeps 4 times per second.
Warning description	The battery is about to run out.
Recording/ playback operation	Continues to operate.
Countermeasures	Replace the battery as required.

11. P2 Card Nearly Full

Display window indication	One of the bars for remaining MEDIA capacity starts blinking.
WARNING lamp	Blinks once per second while recording continues.
Tally lamp	Blinks once per second while recording continues.
Viewfinder	The P2 card remaining capacity indicator blinks.
Warning tone	Beeps once per second while recording continues.
Warning description	The total remaining capacity of all the P2 cards is two minutes or less.
Recording/ playback operation	Continues to operate.
Countermeasures	Replace the cards. If there is an empty card slot, insert a new card.

12. P2 Card Error

Display window indication	If the error occurs during recording, "00:0000:11" appears as the time code indication. The indication continues to flash after recording is stopped and until the next operation is performed. There is no indication if the error occurs during playback.
WARNING lamp	If the error occurs during recording, the lamp flashes four times per second for a period of about three seconds. The lamp does not light if the error occurs during playback.
Tally lamp	If the error occurs during recording, the lamp flashes four times per second for a period of about three seconds. The lamp does not light if the error occurs during playback.
Viewfinder	A flashing "CARD ERR ∗" appears. In the actual indication the ∗ is replaced by the slot number of the P2 card that triggered the error.
Warning tone	If the error occurs during recording, the tone sounds four times per second for a period of about three seconds. The tone does not sound if the error occurs during playback.
Warning description	An error has occurred while recording data to or playing data from a P2 card.
Recording/ playback operation	Stop recording or playback. After recording is stopped, the P2 card where error occurs is write protected.
Countermeasures	Replace the affected P2 card.

13. FAN STOP

Display window indication	No display.
WARNING lamp	Blinks 4 times per second.
Tally lamp	No display.
Viewfinder	The FAN STOP indicator blinks while recording continues.
Warning tone	It does not sound.
Warning description	The fan is at rest because something is wrong with it.
Recording/ playback operation	If the camera-recorder operates with the fan stopped, then the temperature inside rises. While the camera-recorder continues to operate, clips may not be recorded or played back properly.
Countermeasures	Immediately stop using the camera-recorder and consult your distributor.

Error Codes

The following error codes are displayed in the display window if an error occurs in the camera:
Confirm the type of warning and refer to the details in the [Warning Description Tables] (page 145) for countermeasures.

Code No.	Description	Type of warnings
E-11	Video initialisation error	1. System Errors
E-27	Recording control error	1. System Errors
E-30	P2 card removal error	2. Card removal error
E-34	LCD microcontroller error	1. System Errors
E-38	P2 streaming microcontroller error	1. System Errors
E-39	Abnormal initialization of the AVC-Intra codec board	1. System Errors
E-3F	Image sequence error (in case of 24P, 30P and 25P)	6. Image Sequence Error (24P, 30P, 25P)
E-40	Microprocessor error in the camera control circuit.	1. System Errors
E-63	Something is wrong with the system control microprocessor.	1. System Errors
E-6F	Reference signal error.	1. System Errors
00:00:00:11	Recording error on a P2 card	7. Recording Error

1394 Error Codes

Code No.	Description	Recording	Indication in display window
1394 E-82	Signals being input to the DVCPRO connector are not 1× speed transfer signals in DVCPRO50 (50 Mbps) format.	Stops	The time code section of the display window indicates the appropriate error code that blinks every two seconds.
1394 E-83	Incorrect signals are being input to the DVCPRO connector.	Stops	
1394 E-84	Signals being input to the DVCPRO connector are not in DVCPRO format.	Stops	
1394 E-85	Signals being input to the DVCPRO connector are not 1x speed transfer signals in DVCPRO HD format.	Stops	
1394 E-87	Incorrect audio signals are being input to the DVCPRO connector.	Continues with no sound.	
1394 E-90	No signal is supplied to the DVCPRO connector.	While the recording mode continues, no data is recorded on cards unless the abnormal condition is corrected. If an error has occurred before recording, then, recording does not start.	
1394 E-92	The DVCPRO connector is not properly connected. The viewfinder indicates the message "1394 INITIAL ERROR."	No recording in 1394 input mode can be performed.	

Card Warning Code

Code No.	Description	Recording	Indication in display window
E-70	The directory organization on the inserted P2 card does not comply with the standards. ([DIR NG CARD (Slot No.)] is indicated on the viewfinder.)	Although different kinds of recording operations will function, data may not be recorded properly. Use the unit to format the card immediately.	A warning code blinks once every 2 seconds on the time code display section of the display window.
E-71	A P2 card was inserted where the number of rewrites exceeds the limit of the standards. ([RUN DOWN CARD (Slot No.)] is indicated on the viewfinder.)	Although different kinds of recording operations will function, data may not be recorded properly. It is recommended to replace it.	

Warning and Error Display for Thumbnail Operation and USB HOST MODE

Item	Message	Description	Measure
Thumbnails	CANNOT ACCESS!	Data cannot be accessed because it is corrupted or for other reasons.	Restore media and clips to normal state before access.
	WRITE PROTECTED!	The P2 or SD card is write protected.	Insert write-enabled media.
	CARD FULL!	The P2 or SD card is full.	Insert media with sufficient capacity.
	NO CARD!	No P2 or SD card is inserted.	Insert compatible media.
	NO FILE!	The designated file is not found.	Check the file.
	CANNOT COPY!	Images cannot be copied.	Check the conditions for copying.
	CANNOT DELETE !	Contents version mismatch prevents deletion.	Match devices and contents version.
	UNKNOWN CONTENTS FORMAT!	Warning displayed to indicate contents version mismatch.	Match devices and contents version.
	CANNOT FORMAT!	P2 card problem prevents formatting.	Check P2 card.
	CANNOT REPAIR!	Data cannot be repaired since content that cannot be repaired is selected.	Check selected content.
	CANNOT RE-CONNECT!	A clip that does not span multiple cannot be reconnected.	Check selected content.
	INVALID VALUE!	Entered data was invalid.	Enter data in a valid range.
	UNKNOWN DATA!	The metadata character code is invalid.	Use UTF-8 for the metadata character code. Use the viewer to enter correct characters.
	CANNOT REPAIR IN SELECTION!	Some of the selected clip could not be repaired.	
	NO SD CARD!	No SD card is inserted.	Insert an SD card.
	NO COPY TO SAME CARD!	A clip cannot be copied to the card storing the original clip.	Copy the selected clip to a card that does not contain the original clip.
	SAME CLIP IS SELECTED!	Images cannot be copied since the clip has already been copied from the original clip.	Confirm the selected clip and release either the source clip or the destination clip and then execute the copy operation.
	USER CLIP NAME MODIFIED!	Characters in the clip name had to be deleted in adding the counter value.	The user clip name plus the counter value can only contain up to 100 bytes. Characters in the clip name are automatically deleted when the total exceeds 100 bytes.
	TOO MANY CLIPS!	Too many clips are selected.	Reduce the number of selected clips.
	LACK OF REC CAPACITY!	There is not enough recording capacity left on the card.	Insert a card with sufficient recording capacity.
	UNMATCHED RE FORMAT!	The format of the clip which is playing back and the selected format of this unit are not matched.	Set the format in the SYSTEM MODE item. The SYSTEM MODE is selected from the SYSTEM SETTING page.
	MISSING CLIP!	A shot mark will be added to the clips recorded on multiple P2 cards when all P2 cards are not inserted yet.	Insert all P2 cards with recorded clips, and confirm that the ! incomplete clip indicators disappear, and then add shot marks.
Soft keyboard	CANNOT CHANGE!	[PERSON] will be entered while the text memo is not available.	Enter [TEXT] before entering [PERSON].
	CANNOT SET! INVALID VALUE!	The entered value is incorrect.	Change the value.

Item	Message	Description	Measure
HDD (USB HOST MODE)	HDD CAPACITY FULL!	Not enough space left on the hard disk.	There is not enough space on the connected hard disk. Use a new hard disk or formatted hard disk.
	TOO MANY PARTITIONS!	There are too many partitions.	Hard disks can handle up to 23 partitions. Use a new hard disk or formatted hard disk.
	HDD DISCONNECTED!	The unit is not connected to a hard disk.	Reconnect the USB cable. If the hard disk does not operate normally, turn it off and turn it back on again.
	CANNOT FORMAT!	The hard disk cannot be initialized.	Connect another hard disk drive.
	TOO MANY TARGETS!	Multiple devices are connected.	Disconnect devices, turn off the unit and turn it back on again.
	UNKNOWN DEVICE CONNECTED!	The connected DVD drive is not compatible.	Disconnect devices, turn off the unit and turn it back on again.
	CANNOT ACCESS TARGET!	An error occurred during hard disk access.	Check hard disk status and connection.
	CANNOT RECOGNIZE HDD!	The destination target cannot be properly recognized.	Reboot the hard disk or connect a different hard disk.
	CANNOT ACCESS CARD!	An error occurred during P2 card access.	Check P2 card.
	MISMATCH COMPONENT!	Copying cannot be made because the destination card is in the wrong format.	Use a P2 card with appropriate capacity.
	P2 CARD IS UNFORMATTED!	The P2 card is not formatted.	Use a formatted P2 card.
	CARD IS EMPTY! CANNOT COPY!	The P2 selected for copying is empty.	Copying is not performed since the card is empty.
	VERIFICATION FAILED!	The compare check after copying failed.	Copy the data again.
	PLEASE FORMAT P2 CARD!	This warning indicates that data could not be imported from a hard disk to a P2 card because the P2 card contained recorded data.	You cannot copy to a P2 card that contains data. Format the card on a P2 device and copy again.

Menu

Menu Configuration

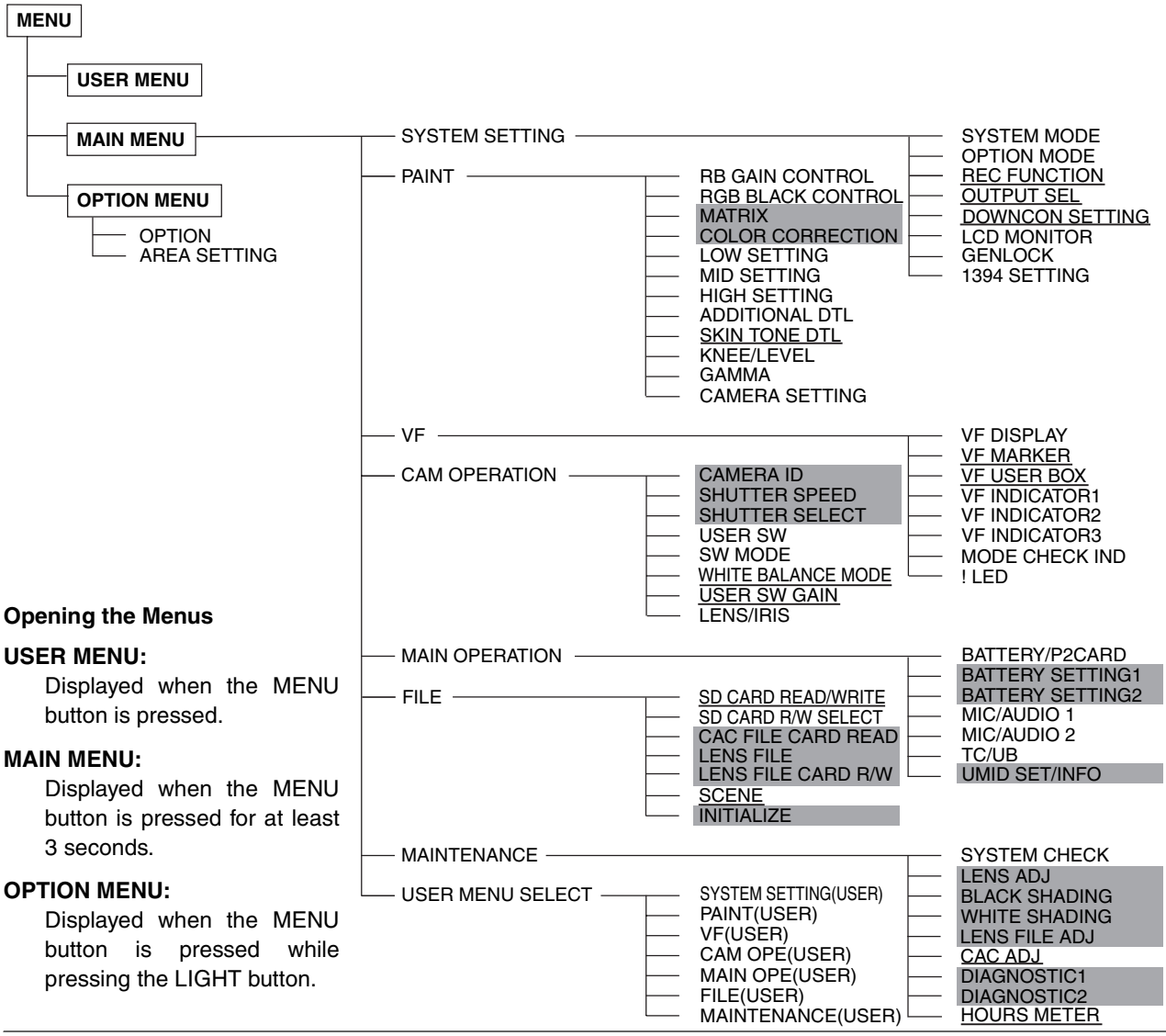

Opening the Menus

USER MENU:
Displayed when the MENU button is pressed.

MAIN MENU:
Displayed when the MENU button is pressed for at least 3 seconds.

OPTION MENU:
Displayed when the MENU button is pressed while pressing the LIGHT button.

◆Notes

- The items highlighted in grey cannot be selected by <USER MENU SELECT>.
- The underlined items can only be selected as one whole page (with all sub-items). Individual sub-items cannot be selected separately.

About Menu Description Tables

The following letters indicate whether the modified menu data is saved to or read out from the memory.
The – indicates that the data cannot be saved or read.

S = Can be saved and read as scene data file.
C = Can be saved or read using SD CARD READ/WRITE.
U = Can be saved and read as user data.
Please refer to [SCENE] (page 189) and [INITIALIZE] (page 189).
F = Can be read using READ FACTORY DATA.
Please refer to [INITIALIZE] (page 189).
R = Can be saved using RC DATA SAVE.
Please refer to [Connection of the remote control unit (AJ-RC10G)] (page 111).

Items/ Data Saved	Adjustable Range	Remarks
REC SIGNAL	CAM VIDEO 1394 SDI	Select video input signals. **CAM:** Record the signal from the camera **VIDEO:** Record the signal from the GENLOCK IN connector (In SD mode only) **1394:** Record the signal from the 1394 input connector **SDI:** Records input to the SDI IN connector (optional).

– C U F R

This section shows the adjustable range of the set value, and available options for this item.

About the settings available for this item.

USER MENU: USER MENU is factory-set. The menu can be configured to suit your preferences by specifying each option according to your purposes and frequency of use, through the <USER MENU SELECT> screen, which is accessible from the MAIN MENU page.
For more information, see [Selecting Options for USER MENU] (page 158).
To display USER MENU, press the MENU button.

MAIN MENU: Allows you to set all options on the settings menu.
This menu has a category-by-category structure, layered according to purposes and frequency of use.
To display MAIN MENU, press the MENU button for three seconds or longer.

SYSTEM SETTING:
This option is used to specify recording signal, recording system, etc.

PAINT: This option is used to fine-adjust images while monitoring the output waveform of the camera, using the waveform monitor. Normally, this adjustment requires assistance from a video engineer.
This menu option may be set with an external remote controller, and is useful when using the unit without a sound recordist.

VF: Used to select the information items to be displayed in the viewfinder screen.

CAM OPERATION:
Used to change settings according to the conditions for the subject.

MAIN OPERATION:
Used to specify recording-related items, such as audio settings, time code, battery and P2 card remaining amounts.

FILE: Used to specify file-related items such as SD memory card reading/writing and lens file settings.

MAINTENANCE:
Used to specify maintenance-related items.

USER MENU SELECT:
Used to edit USER MENU.

OPTION MENU: Provides options which may be needed if functions are added in the future.
To display OPTION MENU, hold down the LIGHT button and press the MENU button.
For more information, contact your distributor.

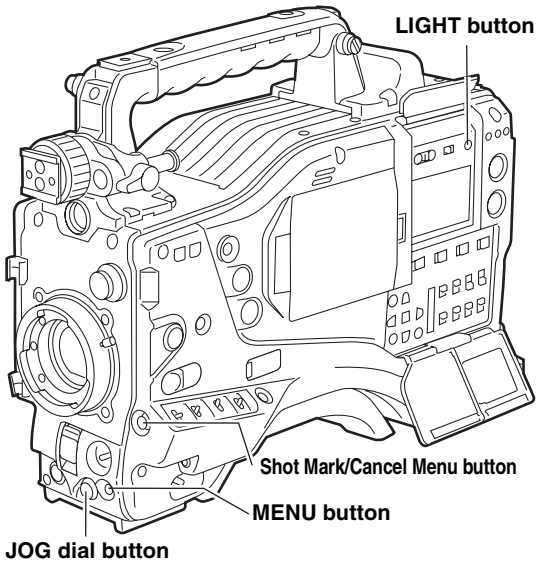

Setting Menu Options

The menu options are set with the MENU and JOG dial buttons.
The menu comprises main menu, sub-menus and options menus.
The data specified through menu options are written and saved in the internal memory of the unit.
This section describes how to set options in MAIN MENU. The other menus can be configured in the same manner (the method of displaying the menu screen depends on the particular menu).

◆ Note

When the unit is in thumbnail mode, the viewfinder displays “THUMBNAIL OPEN”, disabling navigation through the menu.

1 Press the MENU button for three seconds or longer. The MAIN MENU screen appears, together with its options.

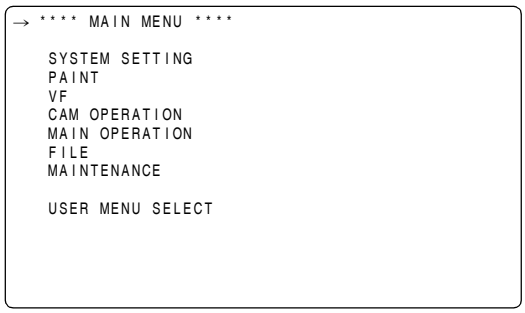

2 Turn the JOG dial button to move the mark (→) to a desired menu option. Then, press the JOG dial button to display the sub-menu screen.

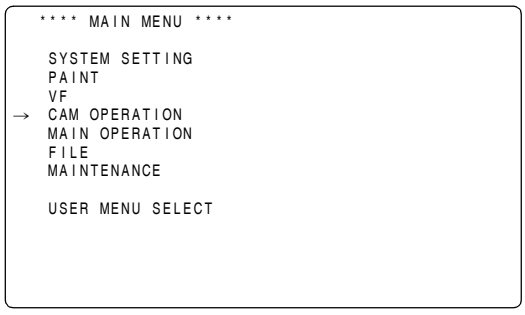

3 Turn the JOG dial button to move the mark (→) to a desired menu option. Then, press the JOG dial button to display the options screen.

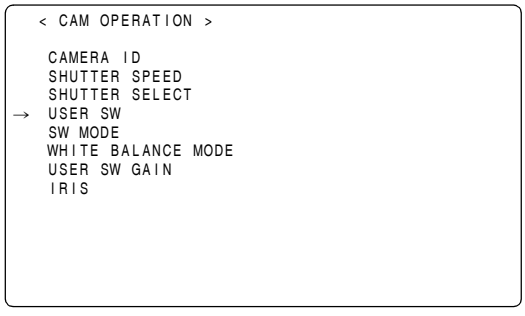

4 Turn the JOG dial button to move the mark (→) to a desired option. Then, press the JOG dial button. The value starts blinking.

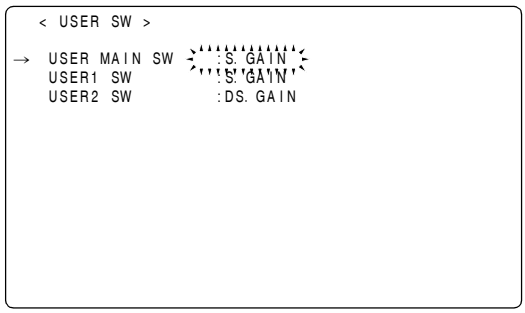

5 Turn the JOG dial button to change the value.

To increase the value:
Turn the JOG dial button clockwise, as seen from the front of the camera.

To decrease the value:
Turn the JOG dial button anti-clockwise, as seen from the front of the camera.
Each turn of the dial switches the value by one step. A quick turn changes the value rapidly; a slow turn makes a fine adjustment.

To turn an option on or off:
To select ON, turn the JOG dial button clockwise, as seen from the front of the camera.
To select OFF, turn the JOG dial button anti-clockwise, as seen from the front of the camera.

To return the changed set value to the previous one:
Press the shot mark/menu cancel button to display the message “PUSH CANCEL BACK TO PREV”.
Press the shot mark/menu cancel button again to return the set value to the value before the change.

◆Note

The following menu items cannot be cancelled using the shot mark/menu cancel button.

- Pages on the USER MENU SELECT screen
- Pages on the FILE screen
- CAMERA ID
- USER SW GAIN
- Part of the WHITE BALANCE MODE pages
- BATTERY SETTING1, 2
- UMID SET/INFO

6 Press the JOG dial button.
The value stops blinking and is accepted.

7 To change the settings for other options on the same page, repeat Steps ***4*** - ***6***.

8 When the settings are finalised, press the MENU button.
This terminates the menu option setting mode and returns the unit to normal operation mode.

Selecting Options for USER MENU

Go to the USER MENU SELECT page from MAIN MENU. Then, open relevant options menu screens to select options to add to USER MENU.
Only the selected options are displayed as options in USER MENU.
For information about how to navigate this menu, see [Setting Menu Options] (page 157).

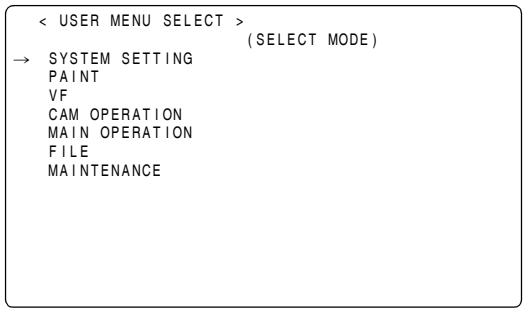

◆ **Note**

Options with [✳] are effective. The number of options that can be added to USER MENU is 14 × 3 = 42 (three pages of options) for camera-related options, and 14 (one page of options) for memory-related options.

Menu Description Tables

SYSTEM SETTING

SYSTEM MODE

Items/ Data Saved	Adjustable Range	Remarks
SYSTEM MODE – C U F –	1080-59.94i 1080-50i 480-59.94i 576-50i	For setting the system frequency and the recording format of the unit. When this item is switched, turn “OFF” the POWER switch on the unit and then turn it “ON” again. ◆**Notes** ● When the remote control unit (AJ-RC10G) is connected, this item is not displayed. To switch this item, operate the main unit independently. ● When the time code is in free run mode and a change is made to the SYSTEM MODE menu option, the time may not be correctly recorded. After turning on the camera-recorder, check the time code and make a change to the setting if required. ● When USB DEVICE mode is selected, no change can be made to this option.
REC SIGNAL – C U F R	CAM VIDEO 1394 SDI	Select video input signals. **CAM:** Record the signal from the camera **VIDEO:** Record the signal from the GENLOCK IN connector (In SD mode only) **1394:** Record the signal from the 1394 input connector **SDI:** Records input to the SDI IN connector (optional). ◆**Notes** ● In Native mode for the AVC-Intra and DVCPRO HD, 1394 cannot be selected. ● After the power has been turned OFF, this setting defaults to CAM when the power is turned ON again. ● In order to select VIDEO and synchronize video signals input to the GENLOCK IN connector (VBS) with the unit, set the GENLOCK item of [GENLOCK] (page 163) to "EXT".
CAMERA MODE – C U F R	(1080-59.94i /480-59.94i) 60i 30P 24P 24PA (1080-50i /576-50i) 50i 25P	For setting the video system for shooting. ◆**Note** In AVC-Intra mode, 24PA cannot be selected.
ASPECT – C U F R	16:9 4:3	Select the aspect ratio for recording. (In SD mode only) **16:9:** Record in <16:9> aspect ratio. **4:3:** Record in <4:3> aspect ratio.

The ____ in the Adjustable Range column indicates the preset mode.

Items/ Data Saved	Adjustable Range	Remarks
SCAN REVERSE – C U F R	OFF ON	Specify whether image correction is used or not, when an anamorphic lens or a lens for film applications is used. **OFF:** Images are not corrected. **ON:** Images are corrected. The vertical and horizontal orientations are inverted.
VF TYPE – C U F R	HD SD	Specify the type of viewfinder to be attached to the camera-recorder.
REC MODE – C U F R	AVC -I 100 AVC -I 50 DVCPRO HD DVCPRO50	Select the recording mode. **AVC-I 100:** Record in AVC-I 100 format **AVC-I 50:** Record in AVC-I 50 format **DVCPRO HD:** Record in DVCPRO HD format **DVCPRO50:** Record in DVCPRO50 format. (In SD mode only) ◆**Notes** If “1394” is selected in REC SIGNAL, AVC-I 100 and AVC-I 50 cannot be selected.
SETUP – C U F R	0% 7.5%A	Switch the setup. (For 480-59.94i only) **0%:** Setup is switched to 0% for both the camera output and the recording. **7.5%A:** Setup is switched to 7.5% for the camera output and 0% for the recording.
PC MODE SELECT – – – F –	USB HOST USB DEV.	Specify the operation mode of the camera-recorder when an external device is connected via USB. **USB HOST:** Sets the camera-recorder to the mode that allows an external hard disk drive to be connected. **USB DEV.:** Sets the camera-recorder to the USB device mode, which allows a PC to be connected via USB 2.0 for use with P2 cards as mass storage. ◆**Note** When the PC MODE menu option is set to ON, no change can be made to this option.
PC MODE – – – F –	ON OFF	Used to enable or disable the mode that allows the camera-recorder to be connected to a PC or an external hard disk drive via USB 2.0. **ON:** Sets the camera-recorder to the mode selected through the PC MODE SELECT menu option. **OFF:** Disables the PC MODE for normal operation. ◆**Note** Once the power is turned off, the option is always set to OFF when the power is turned on next time.

Items/ Data Saved	Adjustable Range	Remarks
REC TALLY – C U F –	RED GREEN CHAR	Select the method for displaying the recording status of camera-recorder when controlling an external VTR by setting 1394 CONTROL items to BOTH. Select the 1394 CONTROL item on the <1394 SETTING> screen in the SYSTEM SETTING page. **RED:** The red tally lamp lights up. **GREEN:** The green tally lamp lights up. **CHAR:** The VF displays [REC] in characters.
ACCESS LED – C U F –	OFF SLOT SIDE LCD SIDE BOTH	Specify whether or not to enable the P2 card access LEDs. **OFF:** Disables both LEDs above the slots and on the side panel. **SLOT SIDE:** Enables the LED above the slots and disables the LED on the side panel. **LCD SIDE:** Enables the LED on the side panel and disables the LED above the slots. **BOTH:** Enables both LEDs above the slots and on the side panel.
P.OFF GPS DATA – C U F –	HOLD CLEAR	Select whether or not to hold the UMID GPS position information while the power is turned off, thereby keeping this information as status data holding the previous value until the power is turned on again, which enables a new measurement to start. **HOLD:** Hold and save the data. **CLEAR:** Clear the data when the power is turned off, and save zero (No-Info) from the next power-on until a new measurement is completed.
SDI METADATA – C U F –	ON OFF	Used to specify whether or not to output metadata (UMID) to SDI when the VIDEO OUT menu option is set to HD SDI or SD HDI.
SDI EDH – C U F –	ON OFF	Select whether or not to add an error detection flag to the SD SDI output.
SAVE SW (AUD OUT) – C U F –	ON OFF	Select whether or not to forcibly disable the audio output when the SAVE ON/OFF switch is set to [ON]. **ON:** Disable audio output. **OFF:** Enable audio output.
SAVE SW (LCD) – C U F –	ON OFF	Select whether or not to automatically turn off the LCD monitor when the SAVE ON/OFF switch is set to [ON]. **ON:** Turn off LCD monitor. **OFF:** Do not turn off LCD monitor.

Items/ Data Saved	Adjustable Range	Remarks
AUTO REC – C U F –	OFF TYPE1 TYPE2	Select the method for detecting REC START/STOP marks from the frame rate information in the user bits added through HD SD IN in HD mode in order to automatically start or stop recording. **OFF:** No automatic recording is performed. **TYPE1:** REC START/STOP marks are detected from LTC input through HD SDI for automatic recording. **TYPE2:** REC START/STOP marks are detected from VITC input through HD SDI for automatic recording. ◆**Note** Set the menu option REC SIGNAL to SDI to input HD SDI signals to the SDI IN connector. For information about user bits frame rate information, see [Setting of the user bits] (page 57). In INTERVAL REC mode and the LOOP REC mode, the AUTO REC function is not available.

The ____ in the Adjustable Range column indicates the preset mode.

REC FUNCTION

Items/ Data Saved	Adjustable Range	Remarks
INTERVAL REC MODE – C U F –	ON ONE SHOT OFF	Sets INTERVAL REC function. **ON:** Uses internal memory to perform interval recording. **ONE SHOT:** Performs "one-shot" recording for the duration specified under REC TIME, and then stops. **OFF:** INTERVAL REC is not performed. ◆**Note** This item cannot be changed when "ON" is selected in LOOP REC MODE.
INTERVAL REC HOLD – C U F –	ON OFF	Selects whether INTERVAL REC MODE settings are retained or not when the power is turned off once. **ON:** Retain **OFF:** Do not retain. The INTERVAL REC MODE is OFF whenever the power is turned on again.
REC TIME*1 – C U F –	00s01f : 59s29f	Set REC TIME (1 cut). ◆**Note** However, the settings can be made frame by frame, and the numbers of the cut-off unit frames for the shortest time period and the set time on the actual operation may vary with the recording method. For details, refer to [Interval Recording] (page 37).
PAUSE TIME*1 – C U F –	00h00m00s01f : 00h04m59s29f : 23h59m59s29f	Specify PAUSE time for recording. ◆**Note** However the settings can be made frame by frame, and the numbers of the cut-off unit frames for the shortest time period and the set time on the actual operation may vary with the recording method. For details, refer to [Interval Recording] (page 37).
TAKE TOTAL TIME – C U F –	NONE : 5day	Specify the time needed for shooting. Select from NONE (continue until operation is manually stopped) to 5 days.
TOTAL REC TIME*1 – – – – –	00m00s01f : 99m59s29f OVER100min NONE	Display total recorded time. The setting cannot be changed using this option. Displays the recording time (recording time needed for the P2 card) calculated using REC TIME, PAUSE TIME, and TAKE TOTAL TIME. ◆**Note** A value based on actual processing is displayed.
AUDIO REC – C U F –	ON OFF	Select whether or not sound will be recorded.
START DELAY – C U F –	0SEC : 10SEC	Set the delay after pressing REC START to start recording in INTERVAL REC.
PRE REC MODE – C U F –	ON OFF	Select whether or not to enable PRE-RECORDING. **ON:** PRE-RECORDING enabled. **OFF:** PRE-RECORDING disabled. ◆**Note** Specify the PRE-RECORDING time by using the menu option PRE REC TIME.

*1 This variable range is the numerical values for 59.94 Hz. For 50 Hz, the frame rate is up to 24f. The frame rate is up to 23f in 24PN (Native) mode.

The ____ in the Adjustable Range column indicates the preset mode.

Items/ Data Saved	Adjustable Range	Remarks
PRE REC TIME – C U F –	1SEC : 8SEC	Set PRE-RECORDING. **1-8SEC:** Set the length of time that can be retrospectively recorded before the REC START button is pressed.
LOOP REC MODE – – – F –	ON OFF	Select whether or not to enable LOOP REC. This setting can be used with PRE-RECORDING features. **ON:** Enable LOOP REC. **OFF:** Disable LOOP REC. ◆**Notes** ● After the power is turned off, this item will default to OFF the next time the power is turned on. ● This item cannot be changed when "ON" or "ONE SHOT" is selected in INTERVAL REC MODE.
REC START – C U F –	ALL NORMAL	Select operating modes that allow recording to start. **ALL:** Allow recording to start during stop, recording pause, and playback. **NORMAL:** Allow recording to start during stop and recording pause. ◆**Note** Even if this is set to "ALL", the operation is "NORMAL", when "ON" or "ONE SHOT" is selected in INTERVAL REC MODE.
P.ON REC SLOT SEL – C U F –	HOLD SLOT1	Select the recording order of the slot when the power is turned on. **HOLD:** The recording order starts with the card previously selected when the power was turned off. **SLOT1:** The recording order starts with the card that is inserted in Slot 1 when the power is turned on.

◆Note

Displayed REC TIME, PAUSE TIME and TOTAL REC TIME are translated into either drop-frame or non-drop-frame according to the mode of operation.

TAKE TOTAL TIME is actual time. Therefore, TOTAL REC TIME may incorporate fractions, depending on the settings.

Example of drop-frame

REC TIME	02s00f
PAUSE TIME	02s00f
TAKE TOTAL TIME	40min
TOTAL REC TIME	19m59s06f

OUTPUT SEL

Items/ Data Saved	Adjustable Range	Remarks
OUTPUT ITEM – C U F –	MENU ONLY TC STATUS	Set the character contents superimposed onto the output signals for the VIDEO OUT connector (Analog or SDI) and MON OUT connector. **MENU ONLY:** Displays only when the menu characters are superimposed. No display appears when other characters are superimposed. **TC:** Display the time code. (Displays the menu when menu characters are superimposed.) ◆**Note** The TC display position moves up and down depending on the camera ID position. **STATUS:** Display the same characters superimposed on the VF signal. (Displays the menu when menu characters are superimposed.)
MONITOR OUT – C U F –	VBS VF Y	Select the output signal on the MON OUT connector. **VBS:** Output a regular composite signal. **VF:** Output a VF Y signal. The status display is also superimposed. **Y:** Output a component Y signal. ◆**Note** The VBS signal is output in playback mode.
MONITOR OUT CHAR – C U F –	ON OFF	Select whether or not to superimpose characters on the MON OUT connector signal independently of the camera's VIDEO OUT CHARACTER switch. (The character content is the same as the video output signal.) **ON:** Enable superimpose. **OFF:** Disable superimpose.
LCD MON CHAR – C U F –	ON OFF	Select whether or not to superimpose characters on the LCD monitor. (The character content is the same as the video output signal.) **ON:** Enable superimpose. (Not interlocked with the VIDEO OUT CHARACTER switch.) **OFF:** Disable superimpose. (Not interlocked with the VIDEO OUT CHARACTER switch.)
VF MODE – C U F –	MEM CAM	When the REC SIGNAL menu option on the SYSTEM MODE screen is set to CAM, select the image to display in the viewfinder. **MEM:** Display the playback image in the playback mode. **CAM:** Always display the camera image.
THUMBNAIL OUT – C U F –	ON OFF	Select whether or not to output clip thumbnails displayed on the LCD monitor to the video output and monitor output signals. **ON:** Enable output. **OFF:** Disable output. ◆**Note** HD SDI signals are being output from the VIDEO OUT connector, thumbnails are not output.

DOWNCON SETTING

Items/ Data Saved	Adjustable Range	Remarks
DOWNCON MODE – C U F R	SQUEEZ LT-BOX S-CROP	For setting the mode of the down converter output signals.
DETAIL – C U F R	ON OFF	For setting the detail function for the down converter output signals ON/OFF. The down converter output signals contain detailed components that are set during HD signal processing. In this setting, these signals overlap the detailed components dedicated to the down converter outputs. Even if this setting is turned off, it is impossible to turn off the detailed components set during HD signal processing.
H.DTL LEVEL – C U F R	00 . 08 . 31	For setting the horizontal detail correction level for the down converter output signals.
V.DTL LEVEL – C U F R	00 . 04 . 31	For setting the vertical detail correction level for the down converter output signals.
DTL CORING – C U F R	00 01 : 15	For setting the noise elimination level of the details.
H.DTL FREQ. – C U F R	1 . 3 . 5	For selecting the horizontal detail frequencies. **1:** 2.5 MHz **4:** 4 MHz **2:** 3 MHz **5:** 4.5 MHz **3:** 3.5 MHz
2D LPF – C U F R	ON OFF	For setting the 2-D low path filter reducing cross colors. **ON:** Cross colors are reduced. **OFF:** Cross colors are not reduced.
SETUP – C U F R	0% 7.5%	For setting the setup level for the down converter output signals. (Only for 1080-59.94i) ◆**Note** When the system frequency is set to 50 Hz, the setup level will be 0%.

◆**Note**

The <DOWNCON SETTING> screen is displayed when SYSTEM MODE is set to 1080-59.94i, 1080-50i (HD mode).

The ____ in the Adjustable Range column indicates the preset mode.

LCD MONITOR

Items/ Data Saved	Adjustable Range	Remarks
BRIGHTNESS – C U F –:	–7 : +0 : +7	Adjust the LCD monitor brightness.
COLOR LEVEL – C U F –:	–7 : +0 : +7	Adjust the LCD monitor chroma level.
CONTRAST – C U F –:	–7 : +0 : +7	Adjust the LCD monitor contrast.
BACKLIGHT – C U F –:	NORMAL HIGH	Adjust the backlight **NORMAL:** Mode normally used **HIGH:** This is brighter than NORMAL
SELF SHOOT – C U F –:	NORMAL MIRROR	Select whether or not to change the LCD monitor to mirror image. **NORMAL:** Do not change to mirror image. **MIRROR:** Change to mirror image.
ASPECT CONV. – C U F –:	SQUEEZE LT.BOX	Select a screen ratio for images displayed on the LCD monitor (In SD mode only). **SQUEEZE:** Display images in the squeeze size. **LT.BOX:** Display images in the letter box size. ◆**Note** This item is enabled only when ASPECT described in “SYSTEM MODE” is set to16:9.

GENLOCK

Items/ Data Saved	Adjustable Range	Remarks
GENLOCK – C U F R:	INT EXT	Switch the camera synchronising signal. **INT:** Synchronise with the internal reference signal regardless of the reference signal input to the GENLOCK IN connector. **EXT:** Synchronise with the reference signal input to the GENLOCK IN connector.
GL PHASE – C U F R:	HD SDI COMPOSIT	For selecting the output signals that lock phases to the signals that are input in the GENLOCK IN connector. (Only for 1080-59.94i, 1080-50i) **HD SDI:** For locking the HD SDI signals to the GENLOCK input. For the down converter output signals, the start position of the video delays by about 90 lines. **COMPOSIT:** For locking the down converter output signals to the GENLOCK input. For the HD SDI output signals, the start position of the video gains by about 90 lines.
H PHASE COARSE – – – – –:	–100 : +000 : +100	Perform coarse phase adjustment for horizontal hold when configuring a system.
H PHASE FINE – – – – –:	–100 : +000 : +100	Perform fine phase adjustment for horizontal hold when configuring a system.

1394 SETTING

Items/ Data Saved	Adjustable Range	Remarks
1394 SPEED – C U F –:	S100 S200 S400	For setting the transfer rate of signals output from the DVCPRO connector. **S100:** 100Mbps **S200:** 200Mbps **S400:** 400Mbps
1394 IN CH – C U F –:	0 : 63 AUTO	For setting the input channel of signals input to the DVCPRO connector. **0 - 63:** To fix to the designated value **AUTO:** To follow the settings of the externally connected devices
1394 OUT CH – C U F –:	0 : 63 AUTO	For setting the input channel of signals output from the DVCPRO connector. **0 - 63:** To fix to the designated value **AUTO:** To follow the settings of the externally connected devices
1394 CONTROL – C U F –:	OFF BOTH	For setting the control for recording start/stop operations of external devices that are connected to the DVCPRO connector. **OFF:** Do not control the externally connected devices. **BOTH:** To control both the unit and the externally connected devices
1394 CMD SEL – C U F –:	REC_P STOP	For setting the control of recording stop operations of the external devices that are connected to the DVCPRO connector. **REC_P:** Operation to pause recording **STOP:** Stopping operation

The ____ in the Adjustable Range column indicates the preset mode.

PAINT

RB GAIN CONTROL

Items/ Data Saved	Adjustable Range	Remarks
R GAIN AWB PRE S C U F R	–200 : +000 : +200	For setting the Rch gain when the WHITE BAL switch is in the PRST position. ● If the remote control unit is connected, settings made from the menu are disabled. (The set value is displayed.)
B GAIN AWB PRE S C U F R	–200 : +000 : +200	For setting the Bch gain when the WHITE BAL switch is in the PRST position. ● If the remote control unit is connected, settings made from the menu are disabled. (The set value is displayed.)
R GAIN AWB A S C U F R	–200 : +000 : +200	For setting the Rch gain when the WHITE BAL switch is in the A position. ● If the remote control unit is connected, settings made from the menu are disabled. (The set value is displayed.)
B GAIN AWB A S C U F R	–200 : +000 : +200	For setting the Bch gain when the WHITE BAL switch is in the A position. ● If the remote control unit is connected, settings made from the menu are disabled. (The set value is displayed.)
R GAIN AWB B S C U F R	–200 : +000 : +200	For setting the Rch gain when the WHITE BAL switch is in the B position. ● If the remote control unit is connected, settings made from the menu are disabled. (The set value is displayed.)
B GAIN AWB B S C U F R	–200 : +000 : +200	For setting the Bch gain when the WHITE BAL switch is in the B position. ● If the remote control unit is connected, settings made from the menu are disabled. (The set value is displayed.)
AWB A GAIN OFFSET S C U F R	ON OFF	For setting the values of the Rch gain and the Bch gain when the auto white balance is executed as the WHITE BAL switch is in the A position. **ON:** To retain the values set in the items of R GAIN AWB A and B GAIN AWB A **OFF:** The values of the Rch gain and the Bch gain is set to “0”.
AWB B GAIN OFFSET S C U F R	ON OFF	For setting the values of the Rch gain and the Bch gain when the auto white balance is executed as the WHITE BAL switch is in the B position. **ON:** To retain the values set in the items of R GAIN AWB B and B GAIN AWB B **OFF:** The values of the Rch gain and the Bch gain is set to “0”.

RGB BLACK CONTROL

Items/ Data Saved	Adjustable Range	Remarks
MASTER PED S C U F R	–200 : +015 : +200	For setting the level of the master pedestal. ● If the remote control unit is connected, settings made from the menu are disabled. (The set value is displayed.)
R PEDESTAL S C U F R	–100 : +000 : +100	For setting the pedestal level of the Rch. ● If the remote control unit is connected, settings made from the menu are disabled. (The set value is displayed.)
G PEDESTAL S C U F R	–100 : +000 : +100	For setting the pedestal level of the Gch. ● If the remote control unit is connected, settings made from the menu are disabled. (The set value is displayed.)
B PEDESTAL S C U F R	–100 : +000 : +100	For setting the pedestal level of the Bch. ● If the remote control unit is connected, settings made from the menu are disabled. (The set value is displayed.)
PEDESTAL OFFSET S C U F –	ON OFF	For setting the pedestal levels of the Rch, the Gch and the Bch when the auto black balance is adjusted. **ON:** To retain the values set in the respective items of R PEDESTAL, G PEDESTAL, and B PEDESTAL **OFF:** The pedestal levels of the Rch, the Gch and the Bch are set to ”0”.
R FLARE S C U F R	–100 : +000 : +100	For adjusting the flare level of the Rch. Adjustment values in this item are added to the flare adjustment value that is adjusted on <LENS FILE ADJ> screen. ● If the remote control unit is connected, settings made from the menu are disabled. (The set value is displayed.)
G FLARE S C U F R	–100 : +000 : +100	For adjusting the flare level of the Gch. Adjustment values in this item are added to the flare adjustment value that is adjusted on <LENS FILE ADJ> screen. ● If the remote control unit is connected, settings made from the menu are disabled. (The set value is displayed.)
B FLARE S C U F R	–100 : +000 : +100	For adjusting the flare level of the Bch. Adjustment values in this item are added to the flare adjustment value that is adjusted on <LENS FILE ADJ> screen. ● If the remote control unit is connected, settings made from the menu are disabled. (The set value is displayed.)

The ____ in the Adjustable Range column indicates the preset mode.

MATRIX

Items/ Data Saved	Adjustable Range	Remarks
■MATRIX TABLE S C U F R	A B	For selecting the color correction table for the linear matrix.
MATRIX R-G S C U F R	–63 : +31 : +63	For performing the linear matrix adjustment. (red/green)
MATRIX R-B S C U F R	–63 : –04 : +63	For performing the linear matrix adjustment. (red/blue)
MATRIX G-R S C U F R	–63 : –01 : +63	For performing the linear matrix adjustment. (green/red)
MATRIX G-B S C U F R	–63 : +04 : +63	For performing the linear matrix adjustment. (green/blue)
MATRIX B-R S C U F R	–63 : +01 : +63	For performing the linear matrix adjustment. (blue/red)
MATRIX B-G S C U F R	–63 : –01 : +63	For performing the linear matrix adjustment. (blue/green)
■L MATRIX TABLE S C U F R	OFF A B	For selecting the color correction table when the GAIN switch is in the L position.
■M MATRIX TABLE S C U F –	OFF A B	For selecting the color correction table when the GAIN switch is in the M position.
■H MATRIX TABLE S C U F –	OFF A B	For selecting the color correction table when the GAIN switch is in the H position.

◆Note

The items indicated by ■ are the setting items for PAINT MENU SW(■) R/W in the <SD CARD R/W SELECT> screen. The items without ■ are the setting items for PAINT MENU LEVEL R/W.

Please refer to [SD CARD R/W SELECT] (page 187) for more information.

All of the preset data for the respective linear matrix data of the ■ MATRIX TABLE B are set to +00.

COLOR CORRECTION

Items/ Data Saved	Adjustable Range	Remarks
R (SAT) S C U F R	–63 : +00 : +63	For performing the color saturation correction of red.
R-Mg (SAT) S C U F R	–63 : +00 : +63	For performing the color saturationcorrection between red and magenta.
Mg (SAT) S C U F R	–63 : +00 : +63	For performing the color saturationcorrection of magenta.
Mg-B (SAT) S C U F R	–63 : +00 : +63	For performing the color saturation correction between magenta and blue.
B (SAT) S C U F R	–63 : +00 : +63	For performing the color saturation correction of blue.
B-Cy (SAT) S C U F R	–63 : +00 : +63	For performing the color saturation correction between blue and cyan.
Cy (SAT) S C U F R	–63 : +00 : +63	For performing the color saturation correction of cyan.
Cy-G (SAT) S C U F R	–63 : +00 : +63	For performing the color saturation correction between cyan and green.
G (SAT) S C U F R	–63 : +00 : +63	For performing the color saturation correction of green.
G-Yl (SAT) S C U F R	–63 : +00 : +63	For performing the color saturation correction between green and yellow.
Yl (SAT) S C U F R	–63 : +00 : +63	For performing the color saturation correction of yellow.
Yl-R (SAT) S C U F R	–63 : +00 : +63	For performing the color saturation correction between yellow and red.

The ____ in the Adjustable Range column indicates the preset mode.

Items/ Data Saved	Adjustable Range	Remarks
R(PHASE) S C U F R	–63 : +00 : +63	For performing the hue correction for red.
R-Mg(PHASE) S C U F R	–63 : +00 : +63	For performing the hue correction between red and magenta.
Mg(PHASE) S C U F R	–63 : +00 : +63	For performing the hue correction for magenta.
Mg-B(PHASE) S C U F R	–63 : +00 : +63	For performing the hue correction between magenta and blue.
B(PHASE) S C U F R	–63 : +00 : +63	For performing the hue correction for blue.
B-Cy(PHASE) S C U F R	–63 : +00 : +63	For performing the hue correction between blue and cyan.
Cy(PHASE) S C U F R	–63 : +00 : +63	For performing the hue correction for cyan.
Cy-G(PHASE) S C U F R	–63 : +00 : +63	For performing the hue correction between cyan and green.
G(PHASE) S C U F R	–63 : +00 : +63	For performing the hue correction for green.
G-Yl(PHASE) S C U F R	–63 : +00 : +63	For performing the hue correction between green and yellow.
Yl(PHASE) S C U F R	–63 : +00 : +63	For performing the hue correction for yellow.
Yl-R(PHASE) S C U F R	–63 : +00 : +63	For performing the hue correction between yellow and red.
■COLOR CORRECT S C U F R	ON OFF	For switching ON/OFF of the 12-axis independent color correction of the position selected with the GAIN switch (L, M, H).

The ____ in the Adjustable Range column indicates the preset mode.

LOW SETTING

Items/ Data Saved	Adjustable Range	Remarks
■MASTER GAIN S C U F R	–3dB : 0dB : 30dB	Select the master gain from –3, 0, 3, 6, 9, 12, 15, 18, 21, 24, 27, or 30dB.
H.DTL LEVEL S C U F R	00 : 10 : 63	For performing the horizontal detail correction level setting.
V.DTL LEVEL S C U F R	00 : 15 : 31	For performing the vertical detail correction level setting.
DTL CORING S C U F R	00 : 01 : 15	For performing the noise elimination level setting for detail.
H.DTL FREQ. S C U F R	00 : 18 : 31	For performing the horizontal detail frequency selection.
LEVEL DEPEND. S C U F R	0 1 : 5	For setting the LEVEL DEPEND. When the Y-detail is emphasized, details of dark sections are compressed. If the numerical value is larger, details of bright sections are also compressed.
MASTER GAMMA S C U F R	0.30 : 0.45 : 0.75	For setting the master gamma. (0.01 step)
BLACK GAMMA S C U F R	–3 : OFF : +3	For setting the gamma curve for the dark portion. **–3 to –1:** The dark portion is compressed. **OFF:** Standard state **+1 to +3:** The dark portion is extended.
■MATRIX TABLE S C U F R	OFF A B	For selecting the color correction table for the linear matrix.
■COLOR CORRECT S C U F R	ON OFF	For switching ON/OFF of the 12-axis independent color correction.

◆Notes

- The items indicated by ■ are the setting items for PAINT MENU SW(■) R/W in the <SD CARD R/W SELECT> screen. The items without ■ are the setting items for PAINT MENU LEVEL R/W. Please refer to [SD CARD R/W SELECT] (page 187) for more information.
- If images are shot when the master gain is set to –3dB, some coloring phenomena may occur on images in very bright sections. The color phenomena become more significant as the difference in the color temperature of the subject incident to the unit from 3200K becomes larger.In order to suppress the coloring phenomena, switch the OUTPUT AUTO KNEE switch to “CAM AUTO KNEE OFF”, set the MANUAL item on the KNEE/LEVEL screen to “ON”, and then set a smaller value for the KNEE SLOPE item and WHITE CLIP LVL item on the KNEE/LEVEL screen. After executing these settings, confirm that there are no coloring phenomena and then start shooting.

MID SETTING

Items/ Data Saved	Adjustable Range	Remarks
■MASTER GAIN S C U F –	–3dB : 6dB : 30dB	Select the master gain from –3, 0, 3, 6, 9, 12, 15, 18, 21, 24, 27, or 30dB.
H.DTL LEVEL S C U F –	00 : 08 : 63	For performing the horizontal detail correction level setting.
V.DTL LEVEL S C U F –	00 : 12 : 31	For performing the vertical detail correction level setting.
DTL CORING S C U F –	00 : 02 : 15	For performing the noise elimination level setting for detail.
H.DTL FREQ. S C U F –	00 : 18 : 31	For performing the horizontal detail frequency selection.
LEVEL DEPEND. S C U F –	0 1 : 5	For setting the LEVEL DEPEND. When the Y-detail is emphasized, details of dark sections are compressed. If the numerical value is larger, details of bright sections are also compressed.
MASTER GAMMA S C U F –	0.30 : 0.45 : 0.75	For setting the master gamma. (0.01 step)
BLACK GAMMA S C U F –	–3 : OFF : +3	For setting the gamma curve for the dark portion. **–3 to –1:** The dark portion is compressed. **OFF:** Standard state **+1 to +3:** The dark portion is extended.
■MATRIX TABLE S C U F –	OFF A B	For selecting the color correction table for the linear matrix.
■COLOR CORRECT S C U F –	ON OFF	For switching ON/OFF of the 12-axis independent color correction.

HIGH SETTING

Items/ Data Saved	Adjustable Range	Remarks
■MASTER GAIN S C U F –	–3dB : 12dB : 30dB	Select the master gain from –3, 0, 3, 6, 9, 12, 15, 18, 21, 24, 27, or 30dB.
H.DTL LEVEL S C U F –	00 : 06 : 63	For performing the horizontal detail correction level setting.
V.DTL LEVEL S C U F –	00 : 10 : 31	For performing the vertical detail correction level setting.
DTL CORING S C U F –	00 : 03 : 15	For performing the noise elimination level setting for detail.
H.DTL FREQ. S C U F –	00 : 18 : 31	For performing the horizontal detail frequency selection.
LEVEL DEPEND. S C U F –	0 : 3 : 5	For setting the LEVEL DEPEND. When the Y-detail is emphasized, details of dark sections are compressed. If the numerical value is larger, details of bright sections are also compressed.
MASTER GAMMA S C U F –	0.30 : 0.55 : 0.75	For setting the master gamma. (0.01 step)
BLACK GAMMA S C U F –	–3 : OFF : +3	For setting the gamma curve for the dark portion. **–3 to –1:** The dark portion is compressed. **OFF:** Standard state **+1 to +3:** The dark portion is extended.
■MATRIX TABLE S C U F –	OFF A B	For selecting the color correction table for the linear matrix.
■COLOR CORRECT S C U F –	ON OFF	For switching ON/OFF of the 12-axis independent color correction.

◆Note

The items indicated by ■ are the setting items for PAINT MENU SW(■) R/W in the <SD CARD R/W SELECT> screen. The items without ■ are the setting items for PAINT MENU LEVEL R/W.

Please refer to [SD CARD R/W SELECT] (page 187) for more information.

The ____ in the Adjustable Range column indicates the preset mode.

ADDITIONAL DTL

Items/ Data Saved	Adjustable Range	Remarks
KNEE APE LVL **S C U F R**	OFF 1 : 5	For changing the detail level of the high brightness portion.
DTL GAIN(+) **S C U F R**	–31 : +00 : +31	Adjust the detail level toward + (upwards).
DTL GAIN(–) **S C U F R**	–31 : +00 : +31	Adjust the detail level toward the – (downwards).
DTL CLIP **S C U F R**	00 : 63	For setting the level for clipping the detail signals.
DTL SOURCE **S C U F R**	(R+G)/2 (G+B)/2 2G+R+B /4 (3G+R)/4 R G	For setting the proportion of the RGB signal components that provide the detail.
MASTER DTL **S C U F R**	–31 : +00 : +31	For revising the master detail level.

The ____ in the Adjustable Range column indicates the preset mode.

SKIN TONE DTL

Items/ Data Saved	Adjustable Range	Remarks
■SKIN TONE DTL S C U F R	OFF A B AB	For selecting the skin color table for enabling the skin tone detail. The skin color table is provided in the SKIN TONE TABLE item. By enabling the skin tone detail, it is possible to shoot human skin more accurately.
■SKIN TONE ZEBRA VF S C U F R	ON OFF	For the setting to display the zebra pattern in the skin tone area displayed in the viewfinder screen. The zebra pattern is displayed when this item is turned “ON” and the <SKIN TONE DTL> screen is opened. The zebra pattern is displayed on area A or B, which is selected in the SKIN TONE TABLE item. It is impossible to display both area A and B at the same time.
SKIN TONE TABLE S C U F R	A B	For selecting the skin color table for subjects to which the skin tone table applies.
SKIN TONE GET – – – – –		For fetching the color information of A or B, which is selected in the SKIN TONE TABLE item, near the center marker. When this function is executed, data from I CENTER to Q PHASE are fetched automatically. The fetched data will be the table data of A or B, which is selected in the SKIN TONE TABLE item. It is impossible to obtain color information of both A and B at the same time.
SKIN DTL CORING S C U F R	0 : 5 : 7	For setting the effect level of the skin tone detail.
Y MAX S C U F R	000 : 190 : 255	For setting the maximum value of brightness for enabling the skin tone.
Y MIN S C U F R	000 : 010 : 255	For setting the minimum value of brightness for enabling the skin tone.
I CENTER S C U F R	000 : 035 : 255	For setting the center position on the I axis (for setting an area that enables skin tone.)
I WIDTH S C U F R	000 : 055 : 255	For setting the area width for enabling the skin tone on the I-axis of which the center is the I CENTER.
Q WIDTH S C U F R	00 : 10 : 90	For setting the area width for enabling the skin tone on the Q-axis of which the center is the I CENTER.
Q PHASE S C U F R	–180 : +000 : +179	For setting phases of the area for enabling skin tone as setting the standard to the Q-axis.

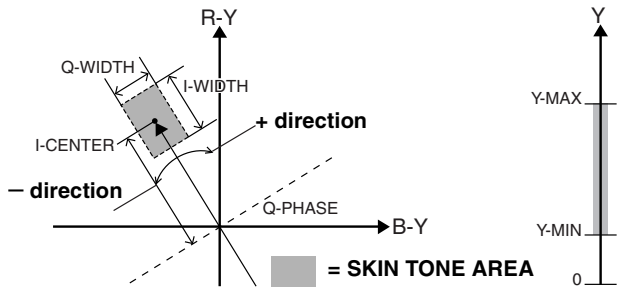

◆Note

The items indicated by ■ are the setting items for PAINT MENU SW(■) R/W in the <SD CARD R/W SELECT> screen. The items without ■ are the setting items for PAINT MENU LEVEL R/W.
Please refer to [SD CARD R/W SELECT] (page 187) for more information.

The ____ in the Adjustable Range column indicates the preset mode.

KNEE/LEVEL

Items/ Data Saved	Adjustable Range	Remarks
MASTER PED S C U F R	–200 : +015 : +200	Set the master pedestal.
■MANUAL KNEE S C U F R	ON OFF	Set the mode when the AUTO KNEE switch is OFF. The KNEE POINT/ SLOPE set value is enabled when this setting is ON.
KNEE POINT S C U F R	70.0% : 93.0% : 107.0%	For setting the knee point position in increments of 1% steps.
KNEE SLOPE S C U F R	00 : 85 : 99	For setting the inclination of the knee.
■WHITE CLIP S C U F R	ON OFF	Set the WHITE CLIP feature to ON or OFF. The WHITE CLIP LVL set value is enabled when this setting is ON.
WHITE CLIP LVL S C U F R	90% : 109%	Set WHITE CLIP LEVEL.
A.KNEE POINT S C U F R	80% : 93% : 107%	Set the AUTO KNEE POINT position in 1% steps. This setting is enabled when the OUTPUT/AUTO KNEE selector switch is set to CAM.AUTO KNEE ON.
A.KNEE LVL S C U F R	100 : 107 : 109	Set the AUTO KNEE LEVEL.
A.KNEE RESPONSE S C U F R	1 : 4 : 8	Set the AUTO KNEE response speed. The smaller the setting value, the faster the response speed.
CHROMA LEVEL S C U F R	OFF –99% : +00% : +40%	For setting the chroma level of the P_R signals and the P_B signals. If this is set to OFF, the color elements of video signals are eliminated.
DRS EFFECT DEPTH S C U F R	1 2 3	Set the compression level of the high-brightness component of DRS. If the numerical value is larger, the compression level of the high-brightness component increases.

◆Note

The items indicated by ■ are the setting items for PAINT MENU SW(■) R/W in the <SD CARD R/W SELECT> screen. The items without ■ are the setting items for PAINT MENU LEVEL R/W.

Please refer to [SD CARD R/W SELECT] (page 187) for more information.

GAMMA

Items/ Data Saved	Adjustable Range	Remarks
MASTER GAMMA S C U F R	0.30 : 0.45 : 0.75	Set the master gamma in 0.01% steps.
R GAMMA S C U F R	–15 : +00 : +15	Set the Rch gamma.
B GAMMA S C U F R	–15 : +00 : +15	Set the Bch gamma.

The ____ in the Adjustable Range column indicates the preset mode.

Items/ Data Saved	Adjustable Range	Remarks
GAMMA MODE SEL S C U F R	DFLT HD SD FILMLIKE1 FILMLIKE2 FILMLIKE3 FILM-REC	For selecting the gamma mode. **DFLT:** This will operate as SD gamma in SD mode, or HD gamma in HD mode. **HD:** Video gamma characteristics for HD (High Definition) **SD:** The gain in the dark section is higher than the HD gamma. **FILMLIKE1:** The cinema gamma characteristics for video applications are selected. **FILMLIKE2:** The cinema gamma characteristics for video applications are selected. In this setting gradations in highlit areas can be expressed better than when FILM LIKE1 is selected. **FILMLIKE3:** The cinema gamma characteristics for video applications are selected. In this setting gradations in highlit areas can be expressed better than when FILM LIKE2 is selected. **FILM-REC:** The cinema gamma characteristics for film applications are used.
DYNAMIC LVL S C U F R	200% 300% 400% 500%	This is enabled when FILM REC is selected in GAMMA MODE SEL. Set the BLACK STRECH position.
BLACK STR LVL S C U F R	00% : 30%	This is enabled when FILM REC is selected in GAMMA MODE SEL. Set the dynamic range.

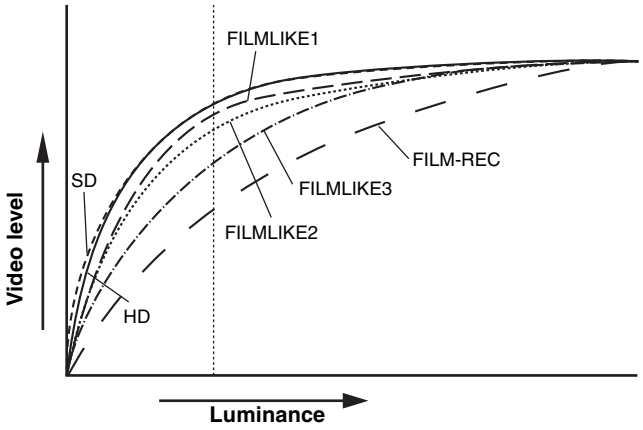

- When the GAMMA MODE SEL item is used for FILM LIKE3, the following settings are recommended.
  MANUAL KNEE : ON
  KNEE POINT : 85.0%
  KNEE SLOPE : 50

■CAMERA SETTING

Items/ Data Saved	Adjustable Range	Remarks
DETAIL S C U F R	ON OFF	For switching ON/OFF of the detail signals.
2D LPF S C U F R	ON OFF	For specifying whether or not to enable or disable the 2-dimension LPF, which reduce the cross color (for the SD mode only). ◆**Note** In PAL mode, the 2-dimension LPF is disable.
HIGH COLOR S C U F R	ON OFF	ON/OFF switching for the HIGH COLOR mode, which enhances the color dynamic range. ◆**Note** While DRS operates, selection of “ON” in this item is not reflected in the operation.
GAMMA S C U F R	ON OFF	For switching ON/OFF of the gamma correction.
TEST SAW S C U F R	ON OFF	Switch the test signal ON or OFF.
FLARE S C U F R	ON OFF	Set the flare correction to ON or OFF.
H-F COMPE. S C U F R	ON OFF	For switching ON/OFF of the aperture correction.

◆**Note**

All items in CAMERA SETTING are setting targets of the item PAINT MENU SW(■) R/W in the <SD CARD R/W SELECT> screen.

The ____ in the Adjustable Range column indicates the preset mode.

VF DISPLAY

Items/ Data Saved	Adjustable Range	Remarks
DISP CONDITION – C U F R	NORMAL HOLD	**NORMAL:** Display status constantly. **HOLD:** Display status only when the MODE CHECK switch is pressed.
DISP MODE – C U F R	1 2 3	Set the DISP MODE. Switch the camera's Warning/Message indication. Please refer to [Display Modes and Setting Changes/adjustment Result Messages] (page 77) for more information.
VF OUT – C U F R	Y NAM R G B	For selecting the video signals to display in the viewfinder screen. **Y:** Brightness signal **NAM:** Output signal with the highest level among R, G, and B signals. **R:** Rch signal **G:** Gch signal **B:** Bch signal
VF DTL – C U F R	0 : 5	For setting the detail level of the viewfinder screen. The details of the signals for the viewfinder are further enhanced. If 0 is selected, then the detail is the same as that for the main line.
ZEBRA1 DETECT – C U F R	0% : 70% : 109%	Set the ZEBRA1 detection level (IRE value).
ZEBRA2 DETECT – C U F R	0% : 85% : 109%	Set the ZEBRA2 detection level (IRE value).
ZEBRA2 – C U F R	ON SPOT OFF	Set the ZEBRA2 to ON, OFF, or SPOT.
LOW LIGHT LVL – C U F R	OFF 10% 15% 20% 25% 30% 35%	Set the camera incoming light volume at which to display LOW LIGHT.
RC MENU DISP. – C U F R	ON OFF	For the setting to display the menu in the viewfinder screen when the remote control unit is connected to the unit.
50M INDICATOR – C U F R	ON OFF	For specifying whether to enable or disable the 50M LED inside the SD viewfinder when the REC MODE menu option is set to DVCPRO50. (In SD mode only)
MARKER/ CHAR LVL – C U F R	50% 60% 70% 80% 90% 100%	Adjust the brightness of markers and characters displayed on the VF.
SYNCHRO SCAN DISP. – C U F R	sec deg	For setting the unit to indicate SYNCHRO SCAN mode. **sec:** indicates time **deg:** indicates the opening angle of the shutter.

ZEBRA Pattern Display

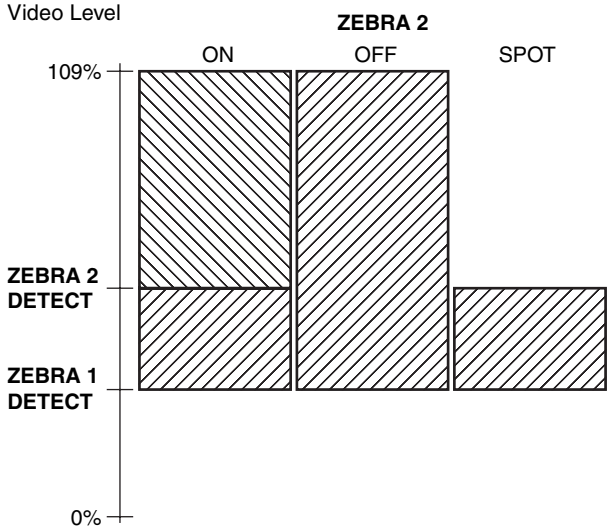

The ____ in the Adjustable Range column indicates the preset mode.

VF MARKER

Items/ Data Saved	Adjustable Range	Remarks
TABLE – C U F R	A B	Select the VF MARKER setting table. First, select table A or B, then set the items below for each table.
CENTER MARK – C U F R	OFF 1 2 3 4	Switch the center mark. **OFF:** Do not display center mark. **1:** + (large) **2:** Hollow (large) **3:** + (small) **4:** Hollow (small)
SAFETY MARK – C U F R	OFF 1 2	Select the frame type for the safety zone. **OFF:** Do not display frame. **1:** Box **2:** Corner frame
SAFETY AREA – C U F R	80% : 90% : 100%	For setting the size of the safety marker. It is possible to set the size by units of 1% with a fixed ratio between of width and height.
FRAME MARK – C U F R	ON OFF	Set the frame marker to ON or OFF.
FRAME SIG – C U F R	4:3 13:9 14:9 VISTA	Set the frame marker. Only enabled when REC MODE is set to 16:9. The VISTA ratio is 16:8.65.
FRAME LVL – C U F R	0 : 15	Set the level outside the frame marker. **0:** Equivalent to signal OFF. (Blanking status) **15:** Same brightness as center area.

◆Note

When SYSTEM MODE is set to either “1080-59.94i” or “1080-50i” (in HD mode), the safety zone marker, the safety zone area, and the frame marker are displayed on the LCD monitor or the SD viewfinder if “LT-BOX” or “S-CROP” is selected in DOWNCON MODE.

VF USER BOX

Items/ Data Saved	Adjustable Range	Remarks
USER BOX – C U F R	ON OFF	For setting whether the user box is displayed in the viewfinder or not.
USER BOX WIDTH – C U F R	1 : 13 : 100	For setting the horizontal width of the user box.
USER BOX HEIGHT – C U F R	1 : 13 : 100	For setting the horizontal position of the user box center.
USER BOX H POS – C U F R	–50 : +00 : +50	For setting the horizontal position of the user box center.
USER BOX V POS – C U F R	–50 : +00 : +50	For setting the vertical position of the user box center.

- The user box can be displayed in any position as a boxtype cursor.

◆Note

When SYSTEM MODE item is set to either “1080-59.94i” or “1080-50i” (in HD mode), the user box is not displayed on the LCD monitor or the SD viewfinder if “LT-BOX” or “S-CROP” is selected in DOWNCON MODE.

The ____ in the Adjustable Range column indicates the preset mode.

VF INDICATOR1

Items/ Data Saved	Adjustable Range	Remarks
EXTENDER – C U F R	ON OFF	For selecting ON or OFF for the extender display.
SHUTTER – C U F R	ON OFF	Set the shutter speed indication to ON or OFF.
FILTER – C U F R	ON OFF	Set the filter No. indication to ON or OFF.
WHITE – C U F R	ON OFF	Set the AWB PRE/A/B indication to ON or OFF.
GAIN – C U F R	ON OFF	For selecting ON/OFF of the gain currently selected, S.GAIN and DS. GAIN displays.
IRIS – C U F R	OFF IRIS S+IRIS S	**OFF:** Disable indications of both the super iris ON status and the iris value. **IRIS:** Enable only the iris value indication. **S+IRIS:** Enables indications of the super iris ON status and the iris value. **S:** Enable indication of the super iris ON status. ● The display of the aperture value and the display of the iris override are interlinked. When the iris override is changed, it is forcibly displayed for 3 seconds.
CAMERA ID – C U F R	BAR OFF	For setting to record the camera ID. **BAR:** The camera ID is recorded when the color bar signals are recorded. **OFF:** Disable ID mix.
ID POSITION – C U F R	UPPER R UPPER L LOWER R LOWER L	For setting the position to display the camera ID. **UPPER R:** Upper right. **UPPER L:** Upper left. **LOWER R:** Lower right. **LOWER L:** Lower left.
DATE/TIME – C U F R	ON OFF	For selecting an option to display year/ month/day and hour/minute/second simultaneously when the camera ID is displayed.
ZOOM LVL – C U F R	ON OFF	Set the zoom position indication to ON or OFF.
COLOR TEMP – C U F R	ON OFF	Set the color temperature indication to ON or OFF.
SYSTEM MODE – C U F R	ON OFF	For selecting ON or OFF for the SYSTEM MODE and REC MODE display.
CAMERA MODE – C U F R	ON OFF	For selecting ON/OFF of the CAMERA MODE display.

The ____ in the Adjustable Range column indicates the preset mode.

VF INDICATOR2

Items/ Data Saved	Adjustable Range	Remarks
CAC – C U F R	ON OFF	For selecting ON or OFF for the color astigmatism correction display
FILM-REC MODE – C U F R	ON OFF	For selecting whether to indicate that the Gamma Select is set to the FILM REC mode.

VF INDICATOR3

Items/ Data Saved	Adjustable Range	Remarks
P2CARD REMAIN – C U F R	OFF ONE-CARD TOTAL	Select the indication mode for the P2 card's remaining capacity. **OFF:** Disable the remaining capacity indication. **ONE-CARD:** Display the remaining capacity of the P2 card currently used for recording. **TOTAL:** Display the total remaining capacity of all P2 cards in slots.
BATTERY – C U F R	ON OFF	Set the battery voltage indication to ON or OFF.
AUDIO LVL – C U F R	ON OFF	Set the audio lever meter indication to ON or OFF.
TC ON COLOR BAR – C U F R	ON OFF	Select whether the time code is to be displayed or not on the color bar. ◆**Note** The time code is displayed on the color bar but it is not recorded.
TC – C U F R	OFF TCG TCR TCG/TCR	Select the time code to display. **OFF:** Disable the time code display. **TCG:** Display the time code generator value in recording mode. **TCR:** Display the time code reader value in playback mode. **TCG/TCR:** Display the time code generator value in recording mode, and the time code reader value in playback mode.
SYSTEM INFO – C U F R	OFF ALWAYS NORMAL	Select the method of displaying system information and warnings. **OFF:** Display no warnings other than "TURN POWER OFF" and "SYSTEM ERROR". **ALWAYS:** Always display warnings. **NORMAL:** Display warnings for 3 seconds only when problems occur.
SAVE LED – C U F R	SAVE P2CARD	Set the SAVE lamp function. **SAVE:** The lamp lights up when the SAVE ON/OFF switch is set to ON and the output system assigned in [OPTION MODE] (page 160) is in the save mode. **P2CARD:** The lamp blinks in synch with the warning message when the P2 card's remaining recording capacity is getting low.

Items/ Data Saved	Adjustable Range	Remarks
REC STATUS – C U F R	ON OFF	Select whether or not to enable “REC” indication in the viewfinder and on the LCD monitor during recording. **ON:** REC indication enabled. **OFF:** REC indication not enabled. ◆**Note** This option is useful when camera-recorder is used independently. When the 1394 CONTROL menu option on the 1394 SETTING screen is set to BOTH, then the setting of the REC TALLY menu option for SYSTEM MODE is used.
PROXY REC – C U F R	ON OFF	When a video encoder card (AJ-YAX800G, optional) is attached, proxy recording information is displayed when recording starts. **ON:** Display indicating whether proxy recording is to be performed on the P2 card only, or on both the P2 card and the SD memory card. **OFF:** Proxy recording information is not displayed.

MODE CHECK IND

Items/ Data Saved	Adjustable Range	Remarks
STATUS – C U F R	ON OFF	For the setting to display the status screen when the MODE CHECK button is pressed.
!LED – C U F R	ON OFF	For the setting to indicate causes for turning on the ⏲ lamp on the viewfinder is displayed when the MODE CHECK button is pressed. The causes for turning on the ⏲ lamp are displayed with ❗.
FUNCTION – C U F R	ON OFF	For the setting to display the FUNCTION screen when the MODE CHECK button is pressed.
AUDIO – C U F R	ON OFF	For the setting to display the AUDIO screen when the MODE CHECK button is pressed.
CAC – C U F R	ON OFF	The setting to display the CAC screen when the MODE CHECK button is pressed.
P.ON IND – C U F R	ON OFF	For the setting to display the status screen immediately after turning on the power of the unit. ◆**Note** Even if it is set to “ON” in this item, the status screen is not displayed immediately after turning on the power of the unit when the STATUS item is set to OFF.

!LED

Items/ Data Saved	Adjustable Range	Remarks
GAIN(0dB) – C U F R	ON OFF	For the setting to turn the ⏲ lamp on the viewfinder on when the GAIN is set to a value other than 0 dB.
GAIN (–3dB) – C U F R	ON OFF	For the setting to turn the ⏲ lamp on the viewfinder on when the GAIN is set to a value other than –3dB.
DS.GAIN – C U F R	ON OFF	For the setting to turn the ⏲ lamp on the viewfinder on when the DS. GAIN (cumulative gain) is activated.
SHUTTER – C U F R	ON OFF	For the setting to turn the ⏲ lamp on the viewfinder on when the electronic shutter is activated.
WHITE PRESET – C U F R	ON OFF	For the setting to turn the ⏲ lamp on the viewfinder on when the WHITE BAL switch is set to the PRST position.
EXTENDER – C U F R	ON OFF	For the setting to turn the ⏲ lamp on the viewfinder on when the lens extender is activated.
B.GAMMA – C U F R	ON OFF	For the setting to turn the ⏲ lamp on the viewfinder on when the BLACK GAMMA is activated.
MATRIX – C U F R	ON OFF	For the setting to turn the ⏲ lamp on the viewfinder on when the color correction table for the linear matrix is selected.
COLOR CORRECTION – C U F R	ON OFF	For the setting to turn the ⏲ lamp on the viewfinder on when the 12-axis independent color correction is selected.
FILTER – C U F R	ON OFF	For the setting to turn the ⏲ lamp on the viewfinder on when the filter combination is anyone other than 3200K and CLEAR.

The ____ in the Adjustable Range column indicates the preset mode.

CAMERA ID

Items/ Data Saved	Adjustable Range	Remarks
ID1 – C U F –	****** ***	Setting 1 for the CAMERA ID recorded on color bars. Up to 10 characters are allowed for this setting.
ID2 – C U F –	****** ***	Setting 2 for the CAMERA ID recorded on color bars. Up to 10 characters are allowed for this setting.
ID3 – C U F –	****** ***	Setting 3 for the CAMERA ID recorded on color bars. Up to 10 characters are allowed for this setting.

◆**Note**

This setting is canceled when READ FACTORY DATA is selected.

SHUTTER SPEED

Items/ Data Saved	Adjustable Range	Remarks
SYNCHRO SCAN – C U F –	ON OFF	Allocate SYNCHRO SCAN as a shutter speed selectable by the shutter switch.
POSITION1 – C U F –	ON OFF	Allocate the shutter speed set by POSITION1 SELECT in the <SHUTTER SELECT> screen as the shutter speed selectable by the shutter switch.
POSITION2 – C U F –	ON OFF	Allocate the shutter speed set by POSITION2 SELECT in the <SHUTTER SELECT> screen as the shutter speed selectable by the shutter switch.
POSITION3 – C U F –	ON OFF	Allocate the shutter speed set by POSITION3 SELECT in the <SHUTTER SELECT> screen as the shutter speed selectable by the shutter switch.
POSITION4 – C U F –	ON OFF	Allocate the shutter speed set by POSITION4 SELECT in the <SHUTTER SELECT> screen as the shutter speed selectable by the shutter switch.
POSITION5 – C U F –	ON OFF	Allocate the shutter speed set by POSITION5 SELECT in the <SHUTTER SELECT> screen as the shutter speed selectable by the shutter switch.
POSITION6 – C U F –	ON OFF	Allocate the shutter speed set by POSITION6 SELECT in the <SHUTTER SELECT> screen as the shutter speed selectable by the shutter switch.

The ____ in the Adjustable Range column indicates the preset mode.

SHUTTER SELECT

Items/ Data Saved	Adjustable Range	Remarks
POSITION1 SEL – C U F –	1/100 1/120 1/250 1/500 1/1000 1/2000 HALF 180.0deg 172.8deg 144.0deg 120.0deg 90.0deg 45.0deg	For setting the shutter speed for POSITION 1. 1/100: 59.94 Hz 1/60: 50Hz
POSITION2 SEL – C U F –	1/100 1/120 1/250 1/500 1/1000 1/2000 HALF 180.0deg 172.8deg 144.0deg 120.0deg 90.0deg 45.0deg	For setting the shutter speed for POSITION 2. 1/100: 59.94 Hz 1/60: 50Hz
POSITION3 SEL – C U F –	1/100 1/120 1/250 1/500 1/1000 1/2000 HALF 180.0deg 172.8deg 144.0deg 120.0deg 90.0deg 45.0deg	For setting the shutter speed for POSITION 3. 1/100: 59.94 Hz 1/60: 50Hz
POSITION4 SEL – C U F –	1/100 1/120 1/250 1/500 1/1000 1/2000 HALF 180.0deg 172.8deg 144.0deg 120.0deg 90.0deg 45.0deg	For setting the shutter speed for POSITION 4. 1/100: 59.94 Hz 1/60: 50Hz
POSITION5 SEL – C U F –	1/100 1/120 1/250 1/500 1/1000 1/2000 HALF 180.0deg 172.8deg 144.0deg 120.0deg 90.0deg 45.0deg	For setting the shutter speed for POSITION 5. 1/100: 59.94 Hz 1/60: 50Hz
POSITION6 SEL – C U F –	1/100 1/120 1/250 1/500 1/1000 1/2000 HALF 180.0deg 172.8deg 144.0deg 120.0deg 90.0deg 45.0deg	For setting the shutter speed for POSITION 6. 1/100: 59.94 Hz 1/60: 50Hz

◆Note

In remote control mode when the AJ-RC10G is connected, the settings for the shutter are set to the value recorded on the AJ-RC10G.

The ____ in the Adjustable Range column indicates the preset mode.

USER SW

Items/ Data Saved	Adjustable Range	Remarks
USER MAIN SW – C U F R	INH S.GAIN DS.GAIN S.IRIS I.OVR S.BLK B.GAMMA Y GET DRS ASSIST C.TEMP AUDIO CH1 AUDIO CH2 REC SW RET SW PRE REC SLOT SEL PC MODE	Allocate the USER MAIN button. For descriptions of the functions, see [Assigning Functions to USER MAIN, USER1 and USER2 Buttons] (page 51).
USER1 SW – C U F R	INH S.GAIN DS.GAIN S.IRIS I.OVR S.BLK B.GAMMA Y GET DRS ASSIST C.TEMP AUDIO CH1 AUDIO CH2 REC SW RET SW PRE REC SLOT SEL PC MODE	Allocate the USER1 button. For descriptions of the functions, see [Assigning Functions to USER MAIN, USER1 and USER2 Buttons] (page 51).
USER2 SW – C U F R	INH S.GAIN DS.GAIN S.IRIS I.OVR S.BLK B.GAMMA Y GET DRS ASSIST C.TEMP AUDIO CH1 AUDIO CH2 REC SW RET SW PRE REC SLOT SEL PC MODE	Allocate the USER2 button. For descriptions of the functions, see [Assigning Functions to USER MAIN, USER1 and USER2 Buttons] (page 51).

SW MODE

Items/ Data Saved	Adjustable Range	Remarks
RET SW – C U F R	R.REVIEW CAM RET	For setting the function when the USER button on the unit, to which the RET button of the lens or the RET SW function is allocated, is pressed. **R.REVIEW:** REC view function It is possible to check a last few seconds of the records taken. **CAM RET:** Return video function It is possible to confirm the return video signals (HD: analog HD-Y signals, SD: VBS signals) supplied to the GENKLOCK IN connector on the unit by using the viewfinder. ◆**Notes** ● When video signals in a format different from that for the video mode of the camera-recorder, return video is not properly displayed. ● When the GENLOCK item (the GENLOCK screen on the SYSTEM SETTING page) is set to INT, the return video image may be displayed as slightly shaking horizontally.
S.BLK LVL – C U F R	OFF –10 –20 –30	For setting the super black level.
AUTO KNEE SW S C U F R	ON OFF DRS	For selecting ON/OFF of the AUTO KNEE function and DRS function. When it is set to OFF, the AUTO KNEE may not function even if the AUTO KNEE switch is turned ON. When the DRS function is enabled and the AUTO KNEE switch is positioned to ON, the DRS function turns on.
SHD,ABB SW CTL – C U F R	ON OFF	For the setting to adjust the black shading automatically when the AUTO W/B BAL switch is held to the ABB side for 8 seconds or more.
COLOR BARS – C U F R	SMPTE FULL BARS SPLIT ARIB	For selecting the color bar to be used. **SMPTE:** Color bar complied with the SMPTE standards **FULL BARS:** Full color bar **SPLIT:** SPLIT color bar for SNG (Satellite News Gathering) **ARIB:** Color bar complied with the ARIB standards
S.GAIN OFF – C U F R	L/M/H S.GAIN	For selecting the method used to release the super gain mode. **L/M/H:** Disabled when the gain selector switch (USER button) is operated. **S.GAIN:** Disabled only with the S.GAIN switch (USER button).

The ____ in the Adjustable Range column indicates the preset mode.

Items/ Data Saved	Adjustable Range	Remarks
DS.GAIN OFF – C U F R	L/M/H DS.GAIN	For selecting the method used to release the digital super gain mode (cumulative gain). **L/M/H:** The mode is released by making a change in the L/M/H switch position and the DS.GAIN switch (USER switch). **DS.GAIN:** The mode is released using only the DS.GAIN switch (USER switch).
RC CHECK SW – C U F R	R.REVIEW PLAY	For specifying what the camera-recorder does when the REC check button on the remote control unit is pressed. **R.REVIEW:** The camera-recorder performs rec review. **PLAY:** The camera-recorder performs playback.

WHITE BALANCE MODE

Items/ Data Saved	Adjustable Range	Remarks
FILTER INH – C U F R	ON OFF	For selecting independently whether memory data for white balance (Ach, Bch) is retained or not for the respective CC filters. **ON:** Regardless of the CC filter, data for the memories (2 memories) for Ach and Bch is retained. **OFF:** The memory data (8 memories) for Ach and Bch is retained for the respective CC filters.
SHOCKLESS AWB – C U F R	OFF FAST NORMAL SLOW1 SLOW2 SLOW3	For setting the length of time for transiting to the switched position of white balance, when the position of the WHITE BAL switch is changed. **OFF:** To transit instantly **FAST:** About 1 second **NORMAL:** About 2 seconds **SLOW1:** About 3 seconds **SLOW2:** About 10 seconds **SLOW3:** About 20 seconds
AWB AREA – C U F R	25% 50% 90%	For switching the detection area for executing the automatic adjustment of white balance. **25%:** An area near the screen center equivalent to 25% of the screen is detected. **50%:** An area near the screen center equivalent to 50% of the screen is detected. **90%:** An area equivalent to 90% of the screen is detected.
TEMP PRE SEL SW – – – F –	VAR 3.2K/5.6K	For selecting whether the PRESET color temperature is variable or switchable between 3200K and 5600K. Immediately after revising the value, the color temperature for PRESET is set to 3200K (For Filter A). **VAR:** Selectable within the range from 2300K ↓ to 8000K. **3.2K/5.6K:** Switchable between 3200K and 5600K.
COLOR TEMP PRE – – – F –	2300K ↓ : 3200K : 8000K	For setting the color temperature when the WHITE BAL switch is set to the PRST position. The PRESET color temperature selected in TEMP PRE SEL SW is set. **2300K ↓ - 8000K:** When VAR was selected in TEMP PRE SEL SW. **3200K/5600K:** When 3200K/5600K was selected in TEMP PRE SEL SW. ● Since the range of color temperatures that can be set will vary with the CC filter position, a numerical value cannot be changed even if the color temperature is changed when a high color temperature is set.
AWB A TEMP – – – F –	2300K ↓ : 3200K : 8000K	For setting the color temperature when the WHITE BAL switch is set to the A position. If the automatic adjustment of white balance is executed in the A position, the color temperature at that time is memorized in the position of the WHITE BAL switch A. If the white balance has been automatically adjusted or the CC filter has been switched, then up to 9000K may be indicated.
AWB B TEMP – – – F –	2300K ↓ : 3200K : 8000K	For setting the color temperature when the WHITE BAL switch is set to the B position. If the automatic adjustment of white balance is executed in the B position, the color temperature at that time is memorized in the position of the WHITE BAL switch B. If the white balance has been automatically adjusted or the CC filter has been switched, then up to 9000K may be indicated.

The ____ in the Adjustable Range column indicates the preset mode.

USER SW GAIN

Items/ Data Saved	Adjustable Range	Remarks
S.GAIN 30 dB – C U F R	✳ •	Select whether or not to enable 30dB for SUPER GAIN. ✳: Enable. •: Disable.
36 dB – C U F R	✳ •	Select whether or not to enable 36dB for SUPER GAIN. ✳: Enable. •: Disable.
DS.GAIN 6 dB ↑ – C U F R	✳ •	Select whether or not to enable 6 dB ↑ for DS.GAIN. ✳: Enable. •: Disable.
10 dB ↑ – C U F R	✳ •	Select whether or not to enable 10 dB ↑ for DS.GAIN. ✳: Enable. •: Disable.
12 dB ↑ – C U F R	✳ •	Select whether or not to enable 12 dB ↑ for DS.GAIN. ✳: Enable. •: Disable.
15 dB ↑ – C U F R	✳ •	Select whether or not to enable 15 dB ↑ for DS.GAIN. ✳: Enable. •: Disable.
20 dB ↑ – C U F R	✳ •	Select whether or not to enable 20 dB ↑ for DS.GAIN. ✳: Enable. •: Disable.

◆Note

When the DS.GAIN function is active, the shutter mode is set to OFF.

LENS/IRIS

Items/ Data Saved	Adjustable Range	Remarks
A.IRIS LEVEL – C U F R	000 : 045 : 100	Set the target value for auto iris.
A.IRIS PEAK/ AVE – C U F R	000 : 030 : 100	Determine the peak-to-standard ratio for the auto iris. A larger value sets the auto iris to respond to the peak in the IRIS detection window, while a smaller value sets it to respond to the average value in the window.
A.IRIS WINDOW – C U F R	NORM1 NORM2 CENTR	Select the auto iris detection window. **NORM1:** The window closer to the center of the screen. **NORM2:** The window closer to bottom of the screen. **CENTR:** The spot window in the center of the screen.
S.IRIS LEVEL – C U F R	000 : 080 : 100	Set the target value for the super iris (Backlight correction function).
IRIS GAIN – C U F R	CAM LENS	Select which unit controls IRIS GAIN. **◆Note** Lenses with an extender, such as ×2, ×0.8 sold before FUJINON DIGI POWER, perform IRIS compensation while enabling the extender. Therefore, if this setting is switched to CAM, the camera's iris control will not operate properly.
IRIS GAIN VALUE – C U F R	01 : 10 : 20	Set the adjustable value for IRIS GAIN. This setting is effective when CAM is selected for IRIS GAIN.

The ____ in the Adjustable Range column indicates the preset mode.

BATTERY/P2CARD

Items/ Data Saved	Adjustable Range	Remarks
BATTERY SELECT – C U F –	PROPAC14 TRIMPAC14 HYTRON50 HYTRON140 DIONIC90 DIONIC160 NP-L7 ENDURA7 ENDURA10 ENDURA-D PAG L95 BP-L65/95 NICD14 TYPE A TYPE B	Select the battery to use. Remaining capacity detection is also performed according to the selected battery. The variable range is changed by the item settings selected on the [BATTERY SETTING1] (page 182) and [BATTERY SETTING2] (page 183) menus. The initial value for TYPE A is set to DIONIC90 while the same for TYPE B is set to HYTRON140. When BP-GL65 or BP-GL95, a battery made of Sony, is used, set this to "BP-L65/95".
EXT DC IN SELECT – C U F –	AC_ADPT PROPAC14 TRIMPAC14 HYTRON50 HYTRON140 DIONIC90 DIONIC160 NP-L7 ENDURA7 ENDURA10 ENDURA-D PAG L95 BP-L65/95 NICD14 TYPE A TYPE B	Set the remaining capacity detection type when a battery is connected to the DC IN connector. Remaining capacity detection is also performed according to the selected battery type. The variable range is changed by the item settings selected on the [BATTERY SETTING1] (page 182) and [BATTERY SETTING2] (page 183) menus. Analog voltage is displayed on the viewfinder screen. When BP-GL65 or BP-GL95, a battery made of Sony, is used, set this to "BP-L65/95".
BATT NEAR END ALARM – C U F –	ON OFF	Select whether or not to set the alarm to beep for BATT NEAR END ALARM.
BATT NEAR END CANCEL – C U F –	ON OFF	If set to ON, the warning tone and indication can be canceled by pressing the MODE CHECK button when BATT NEAR END ALARM is triggered.
BATT END ALARM – C U F –	ON OFF	Select whether or not to set the alarm to beep for BATT END ALARM.
BATT REMAIN FULL – C U F –	70% 100%	Set the display of the remaining battery level indicator bar in the display window when a battery with this function is used. **70%:** Indicate FULL at 70% capacity. **100%:** Indicate FULL at 100% capacity.
CARD NEAR END ALARM – C U F –	ON OFF	Select whether or not to set the alarm to beep for P2 CARD NEAR END ALARM.
CARD NEAR END TIME – C U F –	2min 3min	Set the remaining time to indicate the P2 CARD NEAR END TIME alarm.
CARD END ALARM – C U F –	ON OFF	Select whether or not to set the alarm to beep for P2 CARD END ALARM.
CARD REMAIN/■ – C U F –	3min/■ 5min/■	Set the length of time for one segment (■) of the P2 card's remaining capacity indicator bars. **3min/■:** One segment represents 3 minutes. **5min/■:** One segment represents 5 minutes.

The ____ in the Adjustable Range column indicates the preset mode.

Items/ Data Saved	Adjustable Range	Remarks
PROPAC14	✳ •	Enable selection under BATTERY SELECT. ✳: Enable selection. •: Disable selection.
	AUTO MANUAL	Select auto or manual to set the NEAR END voltage. **AUTO:** Set voltage automatically. **MANUAL:** Set voltage manually.
– C U F –	11.0 : 13.8 : 15.0	When MANUAL is selected in the above menu, set the NEAR END voltage in 0.1 V steps.
TRIMPAC14	✳ •	Enable selection under BATTERY SELECT. ✳: Enable selection. •: Disable selection.
	AUTO MANUAL	Select auto or manual to set the NEAR END voltage. **AUTO:** Set voltage automatically. **MANUAL:** Set voltage manually.
– C U F –	11.0 : 13.6 : 15.0	When MANUAL is selected in the menu above, set the NEAR END voltage in 0.1 V steps.
HYTRON50	✳ •	Enable selection under BATTERY SELECT. ✳: Enable selection. •: Disable selection.
	AUTO MANUAL	Select auto or manual to set the NEAR END voltage. **AUTO:** Set voltage automatically. **MANUAL:** Set voltage manually.
– C U F –	11.0 : 13.5 : 15.0	When MANUAL is selected in the menu above, set the NEAR END voltage in 0.1 V steps.
HYTRON140	✳ •	Enable selection under BATTERY SELECT. ✳: Enable selection. •: Disable selection.
	AUTO MANUAL	Select auto or manual to set the NEAR END voltage. **AUTO:** Set voltage automatically. **MANUAL:** Set voltage manually.
– C U F –	11.0 : 13.5 : 15.0	When MANUAL is selected in the menu above, set the NEAR END voltage in 0.1 V steps.
DIONIC90	✳ •	Enable selection under BATTERY SELECT. ✳: Enable selection. •: Disable selection.
	AUTO MANUAL	Select auto or manual to set the NEAR END voltage. **AUTO:** Set voltage automatically. **MANUAL:** Set voltage manually.
– C U F –	11.0 : 13.6 : 15.0	When MANUAL is selected in the menu above, set the NEAR END voltage in 0.1 V steps.

Items/ Data Saved	Adjustable Range	Remarks
DIONIC160	✳ •	Enable selection under BATTERY SELECT. ✳: Enable selection. •: Disable selection.
	AUTO MANUAL	Select auto or manual to set the NEAR END voltage. **AUTO:** Set voltage automatically. **MANUAL:** Set voltage manually.
– C U F –	11.0 : 13.2 : 15.0	When MANUAL is selected in the menu above, set the NEAR END voltage in 0.1 V steps.
NP-L7	✳ •	Enable selection under BATTERY SELECT. ✳: Enable selection. •: Disable selection.
	AUTO MANUAL	Select auto or manual to set the NEAR END voltage. **AUTO:** Set voltage automatically. **MANUAL:** Set voltage manually.
– C U F –	11.0 : 13.2 : 15.0	When MANUAL is selected in the menu above, set the NEAR END voltage in 0.1 V steps.
ENDURA7	✳ •	Enable selection under BATTERY SELECT. ✳: Enable selection. •: Disable selection.
	AUTO MANUAL	Select auto or manual to set the NEAR END voltage. **AUTO:** Set voltage automatically. **MANUAL:** Set voltage manually.
– C U F –	11.0 : 13.2 : 15.0	When MANUAL is selected in the menu above, set the NEAR END voltage in 0.1 V steps.
ENDURA10	✳ •	Enable selection under BATTERY SELECT. ✳: Enable selection. •: Disable selection.
	AUTO MANUAL	Select auto or manual to set the NEAR END voltage. **AUTO:** Set voltage automatically. **MANUAL:** Set voltage manually.
– C U F –	11.0 : 13.2 : 15.0	When MANUAL is selected in the menu above, set the NEAR END voltage in 0.1 V steps.
ENDURA-D	✳ •	Enable selection under BATTERY SELECT. ✳: Enable selection. •: Disable selection.
	AUTO MANUAL	Select auto or manual to set the NEAR END voltage. **AUTO:** Set voltage automatically. **MANUAL:** Set voltage manually.
– C U F –	11.0 : 13.2 : 15.0	When MANUAL is selected in the menu above, set the NEAR END voltage in 0.1 V steps.

The ____ in the Adjustable Range column indicates the preset mode.

Items/ Data Saved	Adjustable Range	Remarks
PAG L95	✳ •	Enable selection under BATTERY SELECT. ✳: Enable selection. •: Disable selection.
	AUTO MANUAL	Select auto or manual to set the NEAR END voltage. **AUTO:** Set voltage automatically. **MANUAL:** Set voltage manually.
– C U F –	11.0 : 13.5 : 15.0	When MANUAL is selected in the menu above, set the NEAR END voltage in 0.1 V steps.
BP-GL65/95	✳ •	Enable selection under BATTERY SELECT. ✳: Enable selection. •: Disable selection.
	AUTO MANUAL	Select auto or manual to set the NEAR END voltage. **AUTO:** Set voltage automatically. **MANUAL:** Set voltage manually.
– C U F –	11.0 : 13.5 : 15.0	When MANUAL is selected in the menu above, set the NEAR END voltage in 0.1 V steps.

BATTERY SETTING2

Items/ Data Saved	Adjustable Range	Remarks
NiCd14	✳ •	Enable selection under BATTERY SELECT. ✳: Enable selection. •: Disable selection.
NEAR END	11.0 : 13.8 : 15.0	Set the NEAR END voltage in 0.1 V steps.
END	11.0 : 13.4 : 15.0	Set the END voltage in 0.1 V steps.
TYPE A	✳ •	Enable selection under BATTERY SELECT. ✳: Enable selection. •: Disable selection.
FULL	12.0 : 15.1 : 17.0	Set the voltage to display the FULL indication in 0.1 V steps.
NEAR END	11.0 : 13.6 : 15.0	Set the NEAR END voltage in 0.1 V steps.
END	11.0 : 12.9 : 15.0	Set the END voltage in 0.1 V steps.
TYPE B	✳ •	Enable selection under BATTERY SELECT. ✳: Enable selection. •: Disable selection.
FULL	12.0 : 15.5 : 17.0	Set the voltage to display the FULL indication in 0.1 V steps.
NEAR END	11.0 : 13.5 : 15.0	Set the NEAR END voltage in 0.1 V steps.
END	11.0 : 13.1 : 15.0	Set the END voltage in 0.1 V steps.

– C U F –

- The remaining battery level is indicated in percentage when a battery with this function is installed on the unit.

The ____ in the Adjustable Range column indicates the preset mode.

Items/ Data Saved	Adjustable Range	Remarks
FRONT VR CH1 – C U F –	OFF FRONT W.L. REAR ALL	Select whether or not to enable the FRONT AUDIO LEVEL control for the signal selected as the input signal to AUDIO CH1. **OFF:** Disabled for any input selected. Recording level does not change by turning the volume control. **FRONT:** Only enabled when FRONT is selected. **W.L.:** Only enabled when WIRELESS is selected. **REAR:** Only enabled when REAR is selected. **ALL:** Enabled for any input selected.
FRONT VR CH2 – C U F –	OFF FRONT W.L. REAR ALL	Select whether or not to enable the FRONT AUDIO LEVEL control for the signal selected as an input signal to AUDIO CH2. **OFF:** Disabled for any input selected. Recording level does not change by turning the volume control. **FRONT:** Only enabled when FRONT is selected. **W.L.:** Only enabled when WIRELESS is selected. **REAR:** Only enabled when REAR is selected. **ALL:** Enabled for any input selected.
MIC LOWCUT CH1 – C U F –	OFF FRONT W.L. REAR	Select the microphone low cut filter for Input Channel 1. **OFF:** The microphone low cut filter is disabled for any input. **FRONT:** The microphone low cut filter is enabled when the front microphone is selected. **W.L.:** The microphone low cut filter is enabled only when the wireless microphone is selected. **REAR:** The microphone low cut filter is enabled only when the rear microphone is selected.
MIC LOWCUT CH2 – C U F –	OFF FRONT W.L. REAR	Select the microphone low cut filter for Input Channel 2. **OFF:** The microphone low cut filter is disabled for any input. **FRONT:** The microphone low cut filter is enabled when the front microphone is selected. **W.L.:** The microphone low cut filter is enabled only when the wireless microphone is selected. **REAR:** The microphone low cut filter is enabled only when the rear microphone is selected.
MIC LOWCUT CH3 – C U F –	OFF FRONT W.L. REAR	Select the microphone low cut filter for Input Channel 3. **OFF:** The microphone low cut filter is disabled for any input. **FRONT:** The microphone low cut filter is enabled when the front microphone is selected. **W.L.:** The microphone low cut filter is enabled only when the wireless microphone is selected. **REAR:** The microphone low cut filter is enabled only when the rear microphone is selected.
MIC LOWCUT CH4 – C U F –	OFF FRONT W.L. REAR	Select the microphone low cut filter for Input Channel 4. **OFF:** The microphone low cut filter is disabled for any input. **FRONT:** The microphone low cut filter is enabled when the front microphone is selected. **W.L.:** The microphone low cut filter is enabled only when the wireless microphone is selected. **REAR:** The microphone low cut filter is enabled only when the rear microphone is selected.
LIMITER CH1 – C U F –	ON OFF	Select the limiter. The limiter is enabled when AUDIO SELECT CH1 switch is set to MAN.
LIMITER CH2 – C U F –	ON OFF	Select the limiter. The limiter is enabled when AUDIO SELECT CH2 switch is set to MAN.
AUTO LEVEL CH3 – C U F –	ON OFF	Select the level setting method. For more information, see [CH3 and CH4 Recording Levels] (page 54)
AUTO LEVEL CH4 – C U F –	ON OFF	Select the level setting method. For more information, see [CH3 and CH4 Recording Levels] (page 54)
TEST TONE – C U F –	OFF NORMAL ALWAYS CHSEL	Select the test signal. **OFF:** Disable test tone output. **NORMAL:** Test tone signals are output to all of Channels 1 - 4 when the OUTPUT/AUTO KNEE selector switch has been switched to BARS and CH1 of the AUDIO IN switch has been switched to FRONT. **ALWAYS:** Test tone signals are always output to all of Channels 1 - 4 when the OUTPUT/AUTO KNEE selector switch has been switched to BARS. **CHSEL:** Output test tone to the channels where the AUDIO IN switch CH1 or CH2 is set to FRONT when OUTPUT/AUTO KNEE selector switch is set to BARS. The test tone is not output to CH3 and CH4.

◆**Note**

The frequency characteristics when the micro cut filter is applied are 200 Hz to 10 kHz.

The ____ in the Adjustable Range column indicates the preset mode.

MIC/AUDIO2

Items/ Data Saved	Adjustable Range	Remarks
FRONT MIC POWER – C U F –	ON OFF	Select the phantom power supply for the front microphone.
REAR MIC POWER – C U F –	ON OFF	Select the phantom power supply for the rear microphone. When OFF is selected, no phantom power is supplied even if the REAR AUDIO CH1 or CH2 switch is set to +48.
MONITOR SELECT – C U F –	STEREO MIX	When the MONITOR switch is set to ST (stereo), select the signal format for the monitor output.
FRONT MIC LEVEL – C U F –	–40dB –50dB	Select the front microphone input level.
REAR MIC CH1 LVL – C U F –	–50dB –60dB	Select the rear microphone input level.
REAR MIC CH2 LVL – C U F –	–50dB –60dB	Select the rear microphone input level.
REAR LINE IN LVL – C U F –	+4dB 0dB –3dB	Select the rear line input level.
AUDIO OUT LVL – C U F –	+4dB 0dB –3dB	Select the audio output level.
HEADROOM – C U F –	18dB 20dB	Set the headroom (standard level).
WIRELESS WARN – C U F –	ON OFF	Select whether or not to enable the alarm to trigger for poor wireless receiver reception.

The ____ in the Adjustable Range column indicates the preset mode.

TC/UB

Items/ Data Saved	Adjustable Range	Remarks
TC MODE – C U F –	DF NDF	Set the time code mode. **DF:** Drop frame. **NDF:** Non drop frame. ◆**Note** When the camera-recorder operates at 50 Hz or in 24P or 24PA mode, the non-drop frame is always used.
UB MODE – C U F –	USER TIME DATE EXT TCG FRM RATE REGEN	Select the user bits mode. **USER:** Select UB value set in the LCD section. **TIME:** Select local time (hours, minutes, seconds). **DATE:** Select local date and time (2 last digits of year, month, date, time). **EXT:** When "CAM" , "VIDEO", or "SDI" is selected in REC SIGNAL on the SYSTEM MODE screen, the user bits input to the TC IN connector are recorded. When "1394" is selected, the user bits of signals input to the DVCPRO connector are recorded. If reading fails, USER value is retained. **TCG:** TCG value enters UB. **FRM RATE:** Select the shooting information (e.g. frame rate) for the camera. For more information, see [Frame rate information recorded in user bits] (page 58). When clips recorded in Native mode are played back, the frame rate information recorded in users bits in the VAUX range is output. **REGEN:** Read out value stored in the card and record value continuously.
VITC UB MODE – C U F –	USER/EXT TIME DATE TCG FRM RATE REGEN	Select the user bits mode for VAUX TC (VITC). **USER/EXT:** If UB MODE is set to EXT, the EXT value is recorded. If not, USER value set by UB is recorded. **TIME:** Select local time (hours, minutes, seconds). **DATE:** Select local date and time (2 last digits of year, month, date, time). **TCG:** TCG value enters UB. **FRM RATE:** Select camera shoting information (frame rate, etc.). For more information, see [Frame rate information recorded in user bits] (page 58). **REGEN:** Read out value stored in card and record value continuously. ◆**Note** When the camera-recorder operates in 24P, 24PA, 30P (AVC-I) or 25P (AVC-I) mode, FRM RATE is always selected.

Items/ Data Saved	Adjustable Range	Remarks
TCG SET HOLD – C U F –	ON OFF	ON/OFF switching for the feature that always starts recording (when the power is turned ON again) the TCG value that was set before the power is turned OFF.
FIRST REC TC – C U F –	PRESET REGEN	For the first recording after the power is turned on, a P2 card is inserted and then switching from this P2 card to another recording-target P2 card is performed, select whether or not to regenerate the time code as the value on the new P2 card. **PRESET:** Use the camera-recorder's internal time code. **REGEN:** For clips recorded on the recording-target P2 card, regenerate the time code as the time code of the clip that has the most recent date and time. ◆**Notes** ● Set the date and time accurately. For guidance on setting, see [Setting the Internal Clock's Date and Time] (page 59). ● During operation in either 24P or 24PA mode, regeneration of the value of the card recorded in drop-frame is not permitted.
P.OFF LCD DISPLAY – C U F –	ON OFF	Select whether or not to display the time code setting and counter indication on the LCD monitor when the power is turned OFF. **ON:** Display setting and indication while the power is turned OFF. **OFF:** Power-down LCD monitor while camera power is turned OFF. Setting and indication disabled.
TC OUT – C U F –	TCG TCG/TCR	Select the time code to be output to the time code output connector. **TCG:** Always output time code generator value. **TCG/TCR:** Display time code generator value in recording mode, and time code reader value in playback mode.
TC DISP SEL – C U F –	30F 24F	Select the display format for the time code frame digits. (For 1080-59.94i or 480-59.94i only) For details, refer to [Recording time code and user bits] (page 56). **30F:** Display time code frame digits in 30 frames. **24F:** Convert time code frame digits into 24 frames for display.
TC VIDEO SYNCRO – C U F –	0 1 2 3	For setting to correct the time code according to the delay of video signals. **0:** Do not correct. **1:** To delay the time code to be input according to the timing of the video images. **2:** To forward the time code to be output according to the timing of the video images. **3:** To delay the time code to be input and forward the time code to be output, respectively, according to the timing of the video images. For details, refer to [Externally Locking the Time Code] (page 61).

Items/ Data Saved	Adjustable Range	Remarks
REC REVIEW REGEN – C U F –	ON OFF	For selecting whether the time code is regenerated to the value on the P2 card or not, when subsequent recording starts after setting the RET SW item on the SW MODE screen to R.REVIEW and pressing the RET button on the lens or the USER button on the unit on which the RET SW function is assigned. **ON:** The time code is regenerated to the value on the tape. **OFF:** The time code is not regenerated.

UMID SET/INFO

Items/ Data Saved	Adjustable Range	Remarks
COUNTRY – C U F –	NO-INFO	Input the user's country. NO-INFO is displayed until the input completes.
ORGANIZATION – C U F –	NO-INFO	Input the user's organisation or company name. NO-INFO is displayed until the input completes.
USER – C U F –	NO-INFO	Input the user name. NO-INFO is displayed until the input completes.
DEVICE NODE – – – – –		Indicate the product ID number.

◆**Note**

Please refer to [Setting UMID Information] (page 66) for the UMID information setting.

The ____ in the Adjustable Range column indicates the preset mode.

FILE

SD CARD READ/WRITE

Items/ Data Saved	Adjustable Range	Remarks
R.SELECT – – – **F** –	1 : 8	Select the file number to read out.
READ – – – – –		Read out the data from the SD memory card.
W.SELECT – – – **F** –	1 : 8	Select the file number to write in.
WRITE – – – – –		Write the camera-recorder's menu data to the SD memory card.
CARD CONFIG – – – – –		Format the SD memory card.
TITLE READ – – – – –		Read out the title of the data recorded on the SD memory card.
TITLE1 - 8 – – – – –	✳✳✳✳ ✳✳✳✳	Up to 8 letters can be set for the title name.

◆Note

For a USB DEVICE mode, errors occur even if the respective items for SD CARD READ/WRITE are executed, since it does not access an SD memory card. Set PC MODE to "OFF" and then execute the operation again.

SD CARD R/W SELECT

Items/ Data Saved	Adjustable Range	Remarks
SYSTEM MODE R/W – – – **F** –	ON OFF	Specify whether or not to use the settings for the options on the SYSTEM MODE screen when data is read or written from or to SD memory cards.
ID READ/ WRITE – – – **F** –	ON OFF	Select whether or not to include the CAMERA ID when reading out or writing to the SD memory card.
USER MENU SELECT R/W – – – **F** –	ON OFF	Select whether or not to include the FILE MENU SELECT settings when reading out or writing to the SD memory card.
SYSTEM MENU R/W – – – **F** –	ON OFF	Specify whether or not to use the settings on all screens except the SYSTEM MODE screen on the SYSTEM SETTING page and the settings on the OPTION MENU page when data is read or written from or to SD memory cards.
PAINT MENU LEVEL R/W – – – **F** –	ON OFF	Select whether or not to include the adjusted values on the PAINT page when reading out or writing to the SD memory card.
PAINT MENU SW(■) R/W – – – **F** –	ON OFF	Select whether or not to include the set values on the PAINT MENU page when reading out or writing to the SD memory card.
VF MENU R/W – – – **F** –	ON OFF	Select whether or not to include the set values on the VF page when reading out or writing to the SD memory card.
CAM OPE MENU R/W – – – **F** –	ON OFF	Select whether or not to include the set values on the CAM OPERATION page when reading out or writing to the SD memory card.
MAINTE MENU R/W – – – **F** –	ON OFF	Select whether or not to include the set values on the MAINTENANCE page when reading out or writing to the SD memory card.
MAIN OPE MENU R/W – – – **F** –	ON OFF	Select whether or not to include the set values on the MAIN OPERATION page when reading out or writing to the SD memory card.

The ____ in the Adjustable Range column indicates the preset mode.

CAC FILE CARD READ

Items/ Data Saved	Adjustable Range	Remarks
CARD READ SELECT – – – F –	1 : 32	For selecting the number for performing the color astigmatism correction data operation (READ/DELETE) that is recorded on the SD memory card.
READ – – – – –		For reading the CAC FILE from the SD memory card. When this is selected, the display moves to the FILE READ screen.
DELETE – – – – –		For deleting the CAC FILE on the SD memory card
TITLE READ – – – – –		For reading the name of the CAC FILE on the SD memory card
TITLE SCROLL – – – – –	1 : 25	For scrolling the CAC files on the SD memory card. Select this with the cursor, press the JOG dial button, and then turn the JOG dial button to scroll the CAS files.
01 - 32 – – – – –		For indicating the file names of 01 to 32 up to 27 characters

FILE READ screen

Items/ Data Saved	Adjustable Range	Remarks
TITLE		The name of the CAC File selected in the READ item of the CAC FILE CARD is displayed.
YES		The CAC files that are read from the SD memory card are recorded in the built-in memory of the unit.
NO (CANCEL)		The CAC files read from the SD memory card are not recorded in the built-in memory of the unit.
MEM STORE NO	EMPTY 1 : 32	**EMPTY:** When data are recorded in built-in memory of the unit, the system searches vacant spaces to record the data. **1 - 32:** Data are recorded with the selected number. If any CAC FILE has already been recorded with that number, data are overwritten.
TITLE SCROLL	1 : 25	The CAC files in built-in memory of the unit are scrolled. Select this item using the cursor, and press the JOG dial button and then turn the JOG dial button to scroll the CAC files.
01 - 32		The file names from 01 to 32 are displayed with up to 27 characters.

LENS FILE

Items/ Data Saved	Adjustable Range	Remarks
FILE NO. – – – F –	1 : 8	Select the lens file number.
READ – – – – –		Read the lens file data.
WRITE – – – – –		Write the lens file data.
RESET ALL – – – – –		For resetting the all data of the lens file.
TITLE1 - 8 – – – – –	******* *****	Up to 12 letters can be set for the title name.

LENS FILE CARD R/W

Items/ Data Saved	Adjustable Range	Remarks
CARD FILE SELECT – – – F –	1 : 8	For selecting the number of the lens file in the SD memory card.
READ – – – – –		For reading the lens file data from the SD memory card.
WRITE – – – – –		For writing the lens file data into the SD memory card.
TITLE READ – – – – –		For reading the title of the lens file in the SD memory card.
TITLE1 - 8 – – – – –	******* *****	For setting a title consisting of not more than 12 characters.

◆Note

For a USB DEVICE mode, errors occur even if the respective items of LENS FILE CARD R/W are executed, since it does not access an SD memory card. Set PC MODE to “OFF” and then execute the operation again.

The ____ in the Adjustable Range column indicates the preset mode.

SCENE

Items/ Data Saved	Adjustable Range	Remarks
READ USER DATA – – – – –		Read out the data from the user area in the memory.
SCENE SEL – – – **F** –	1 : 4	Select the scene file.
READ – – – – –		Read the scene file.
WRITE – – – – –		Write the scene file.
RESET – – – – –		Reset the scene file values to the initial values.
TITLE 1-4 – – – – –		Create the scene file title.

◆Note

For a USB DEVICE mode, errors occur even if the READ USER DATA item is executed, since it does not access an SD memory card. Set PC MODE to “OFF” and then execute the operation again.

INITIALIZE

Items/ Data Saved	Adjustable Range	Remarks
READ FACTORY DATA – – – – –		The menu (MAIN MENU, OPTION MENU) values are all reset to factory settings. **◆Note** The settings for the following are not reset to the factory-set values. ● Scene file ● User data ● Lens file ● Black shading data
WRITE USER DATA – – – – –		Save the user preference menu data in the camera’s internal memory.

◆Note

For a USB DEVICE mode, errors occur even if the READ FACTORY DATA item is executed, since it does not access an SD memory card. Set PC MODE to “OFF” and then execute the operation again.

The ____ in the Adjustable Range column indicates the preset mode.

SYSTEM CHECK

Items/ Data Saved	Adjustable Range	Remarks
COLOR CHECK – – – – –	ON OFF	ON/OFF switching for checking proper operation of the camera-recorder. The RGB level in the area around the center of the screen is indicated in the viewfinder to show whether each signal is successfully communicated from the optical channel to the digital channel and processed.

LENS ADJ

Items/ Data Saved	Adjustable Range	Remarks
F2.8 ADJ – – – – –	ON OFF	The iris is only set to F2.8 when this item set to ON. (Adjustment to F2.8 will be executed on the lens)
F16 ADJ – – – – –	ON OFF	The iris is only set to F16 when this item set to ON. (Adjustment to F16 will be executed on the lens)

BLACK SHADING

Items/ Data Saved	Adjustable Range	Remarks
CORRECT – C U F R	ON OFF	ON/OFF switching for digital black shading compensation.
DETECTION (DIG) – – – – –	–	Execute digital black shading compensation.

WHITE SHADING

Items/ Data Saved	Adjustable Range	Remarks
CORRECT – C U F R	ON OFF	ON/OFF switching for white shading compensation.
R H SAW R H PARA R V SAW R V PARA G H SAW G H PARA G V SAW G V PARA B H SAW B H PARA B V SAW B V PARA – – – F –	–255 : +000 : +255	For executing the white shading compensation manually. The sawteeth-shaped waveform and the parabola waveform of the respective RGB channels are adjusted in the horizontal direction and the vertical direction.

LENS FILE ADJ

Items/ Data Saved	Adjustable Range	Remarks
RB GAIN CTRL RESET – – – F –	ON OFF	**ON:** The gains of Rch and Bch adjusted in <RB GAIN CONTROL> screen are reset. Furthermore, the flare levels of Rch, Gch and Bch that are adjusted on <RGB BLACK CONTROL> screen are reset. **OFF:** The gains of Rch and Bch adjusted in <RB GAIN CONTROL> screen areenabled. Furthermore, the flare levels of Rch, Gch and Bch that are adjusted on <RGB BLACK CONTROL> screen are enabled.
LENS R GAIN OFFSET – – – F –	–200 : +000 : +200	For compensating Rch sensitivity of the lens used.
LENS B GAIN OFFSET – – – F –	–200 : +000 : +200	For compensating Bch sensitivity of the lens used.
LENS R FLARE – – – F –	000 : 100	For adjusting the flare level of Rch.
LENS G FLARE – – – F –	000 : 100	For adjusting the flare level of Gch.
LENS B FLARE – – – F –	000 : 100	For adjusting the flare level of Bch.

- Data adjusted on the LENS FILE ADJ screen can be stored on an SD memory card as a lens file.

The ____ in the Adjustable Range column indicates the preset mode.

CAC ADJ

Items/ Data Saved	Adjustable Range	Remarks
CAC CONTROL – – **U F R**	ON OFF	**ON:** The color astigmatism correction is performed. **OFF:** The color astigmatism correction is not performed.
CAC FILE DELETE – – – – –	—	The color astigmatism correction file that is recorded in built-in memory of the unit and selected in the CAC FILE No item is deleted.
CAC FILE NO. – – – – –	1 : 32	To delete the color astigmatism correction file from the CAC FILE DELETE item, select the color astigmatism correction file to be deleted.
TITLE SCROLL – – – – –	1 : 25	The color astigmatism correction files are scrolled. Select this item by using the cursor, and press the JOG dial button and then turn the JOG dial button to scroll the CAC files.
01 - 32 – – – – –		The first 27 characters of the names of the color astigmatism correction files 01 to 32 are displayed.

DIAGNOSTIC1

Items/ Data Saved	Adjustable Range	Remarks
CAMSOFT MAIN – – – – –		Displays the version of the main software for the camera microprocessor.
CAM TABLE – – – – –		Display the table version.
PULSE FPGA – – – – –		Displays the version of the program for driving the CCD.
UCIF FPGA – – – – –		Displays the version of the program for the microprocessor interface FPGA.
FM FPGA – – – – –		Displays the version of the program for the frame memory control FPGA.
CHAR FPGA – – – – –		Displays the version of the program for the HD signal I/O control FPGA.
DC FPGA – – – – –		Displays the version of the program for the SD signal I/O control FPGA.

DIAGNOSTIC2

Items/ Data Saved	Adjustable Range	Remarks
SYSCON SOFT – – – – –		Display the software version for the system control microprocessor.
LCD SOFT – – – – –		Display the software version for the LCD microprocessor.
P2CS OS – – – – –		Display the OS version for the streaming controller.
P2CS AP – – – – –		Display the application version for the streaming controller.
SH4CTRL FPGA – – – – –		Display the program version for the streaming control FPGA.
PRCCTRL FPGA – – – – –		Displays the version of the program for the prerecording control FPGA.
SYSIF FPGA – – – – –		Display the program version for the serial interface FPGA.
SDI IN FPGA – – – – –		Displays the version of the program for the SDI board FPGA (optional).
AVC-I SOFT – – – – –		Display the control software version of the AVC-I board.
AVC-I FPGA – – – – –		Display the FPGA program version of the AVC-I board.

HOURS METER

Items/ Data Saved	Adjustable Range	Remarks
OPERATION – – – – –		Display total hours the camera power has been turned ON.
P.ON TIMES – – – – –		Display total number of times the power switch has been turned ON.

OPTION MENU

OPTION

Items/ Data Saved	Adjustable Range	Remarks
ENG SECURITY – – – – –	<u>ON</u> OFF	Select whether or not to prohibit opening the menu screen. **ON:** Menu screen cannot be opened. Please consult your distributor to release the setting. **OFF:** Menu screen can be opened.
FRAME RATE UB – **C** – – –	<u>FRM RATE</u> MENU	For setting the user bits to record when the video system is set to 24P or 24PA. For details, refer to [Recording time code and user bits] (page 56). **FRM RATE:** For recording the shooting information (frame rate etc.) of the camera. **MENU:** This follows the settings in the UB MODE item and the VITC UB MODE item of <TC/UB> screen. However, the camera recording information is always recorded when recording in Native mode.
1394 CONFIG – **C** – – –	<u>DFLT(000)</u> 001 : 255	This is the menu for expanding the DVCPRO connector. Use with DFLT in normal operation.
1394 GAP COUNT – **C** – – –	0 : <u>40</u> : 63	For setting the interval between packets.
AUDIO OUT DELAY – **C** – – –	DELAYED <u>THROUGH</u>	Select whether or not to delay audio, headphone and speaker outputs. **DELAYED:** Delay audio output in synchronisation with video output. **THROUGH:** Output audio input without delay. This setting prevents echo effect between the sound source and audio output when the sound source is near the camera-recorder.
FAN MODE – – – – –	OFF <u>AUTO</u>	For setting the operation mode of the fan **OFF:** The fan always stops. **AUTO:** The fan will run automatically when the temperature in the unit increases. ◆**Note** Once the power is turned off, this will always be set to "AUTO" whenever the power is turned on. If the unit is operated as the fan stops, the temperature in the unit will increase, and data may not record or play back properly. Use the unit after setting this item to "AUTO" for normal operation.

AREA SETTING

Items/ Data Saved	Adjustable Range	Remarks
AREA SELECT – – – – –	<u>NTSC</u> NTSC (J) PAL	**NTSC:** Any NTSC color TV standard other than Japan is selected. **NTSC (J):** Japan color TV standard is selected. **PAL:** PAL color TV standard is selected.
■AREA SET – **C** – – –	—	The settings for the area selected in the AREA SELECT item are applied. For details, refer to [Color TV Standard Settings (Settings for frame frequency)] (page 13).

The ____ in the Adjustable Range column indicates the preset mode.

Updating the firmware incorporated into the camera-recorder

For the most up-to-date information on firmware, see the support page for P2 at the following Web site:
https://eww.pavc.panasonic.co.jp/pro-av/
To update the firmware, confirm the version on AJ-HPX3000 by selecting MAINTENANCE → DIAGNOSTIC 1 and DIAGNOSTIC 2 screens from the menu, and then access the above Web site to download the firmware if necessary. Then, load the downloaded file on AJ-HPX3000 through an SD memory card to complete the update. For more information on how to update the firmware, see the above site.

◆Note
SD cards used on AJ-HPX3000 must be compliant with the SD standards. In addition, they must be formatted with the camera-recorder. If they must be formatted with a PC, then download special software from the above Web site and use it to format the SD cards.

Specifications

General

Power supply:
DC 12 V (11.0 V - 17.0 V)
Power consumption:
44 W

indicates safety information.

Operating temperature:
0 °C to +40 °C (32 °F to +104 °F)
Storage temperature:
–20 °C to +60 °C (–4 °F to +140 °F)
Operating humidity:
10% to maximum 85% (relative humidity)
Maximum continuous operation:
Approximately 120 minutes (using an Anton/Bauer DIONIC90 battery)
Dimensions (W × H × D):
137 mm × 209 mm × 318 mm (5-3/8 inches × 8-1/4 inches × 12-1/2 inches)
(excluding handle and wireless option cover)
Weight: Approx. 4.8 kg (10.6 lb)
(main unit only)

Camera Unit

Pickup devices: 2/3-inch, 2.2-million pixels, IT-type CCD × 3
Image pickup scheme:
RGB 3CCD
Total pixels: 2010 (H) × 1120 (V)
CC Filter: A: 3200K
B: 4300K
C: 5600K
D: 6300K
ND Filter: 1: CLEAR
2: 1/4ND
3: 1/16ND
4: 1/64ND
Quantizing: 14-bit
Horizontal drive frequency:
74.1758 MHz (59.94 Hz)
74.25 MHz (50 Hz)
Sampling frequencies:
74.1758 MHz (59.94 Hz)
74.25 MHz (50 Hz)
Digital signal processing:
74.1758 MHz (59.94 Hz)
74.25 MHz (50 Hz)
Programmable gain:
–3 dB, 0 dB, +3 dB, +6 dB, +9 dB, +12 dB, +15 dB, +18 dB, +21 dB, +24 dB, +27 dB or +30 dB
Digital Super Gain (DS.GAIN):
Selectable from +6 dB, +10 dB, +12 dB, +15 dB or +20 dB
Super Gain (S.GAIN):
Selectable from 30 dB or 36 dB
Shutter speeds: 1/60 (50 Hz), 1/100 (59.94 Hz), 1/120, 1/250, 1/500, 1/1000, 1/2000, HALF 180 deg, 172.8 deg, 144.0 deg, 120.0 deg, 90.0 deg, 45.0 deg
Synchro-scan shutter:
1/61.7 to 1/7200
(1080/59.94i, 480/59.94i)
1/30.9 to 1/3600
(1080/29.97P, 480/29.97P)
1/24.7 to 1/2880
(1080/23.98P(A), 480/23.98P(A))
1/51.4 to 1/6000
(1080/50i, 576/50i)
1/25.7 to 1/3000
(1080/25P, 576/25P)
Lens mount: 2/3-inch bayonet type
Color separation optical system:
Optical prism (F1.4)
Sensitivity: F10
(2000 lx, 89.9% reflection, 1080/59.94i)
Minimum object illuminance:
0.064 lx
(For F1.4, +36 dB (S. GAIN), +20 dB (DS. GAIN))
Video S/N: 54 dB (standard)
Registration error: 0.03% or less (all areas, excluding lens distortion)
Horizontal resolution:
1000 TV lines or more

Memory Card Unit

Record media: P2 card
Video recording formats:
Selectable from AVC-Intra100/ AVC-Intra50/DVCPRO HD/DVCPRO50
Audio recording formats:
48 kHz 16-bit 4ch
Recording/playback time:
Approximately 16 minutes:
For recording in AVC-Intra100 (1080/ 59.94i, 1080/50i) mode using one AJ-P2C016RG
Approximately 32 minutes:
For recording in DVCPRO (480/59.94i, 576/50i) mode using one AJ-P2C008HG

◆Note

This recording time represents one shot continuously recorded on a P2 card. The recording time may be shorter, depending on the number of shots recorded.

For the latest information on P2 cards not available in the operating Instructions, visit the P2 Support Desk at the following Web sites.

https://eww.pavc.panasonic.co.jp/pro-av/

Digital Video System

Frequency range: Y: 74.1758 MHz (59.94 Hz)
74.25 MHz (50 Hz)
(AVC-Intra100/AVC-Intra50/ DVCPRO HD)
P_B/P_R: 37.0879 MHz (59.94 Hz)
37.125 MHz (50 Hz)
(AVC-Intra100/AVC-Intra50/ DVCPRO HD)
Y: 13.5 MHz (DVCPRO50)
P_B/P_R: 6.75 MHz (DVCPRO50)
Quantization: 10 bits (AVC-Intra100/AVC-Intra50)
8 bits (DVCPRO HD/DVCPRO50)
Compression method:
H.264/AVC Intra Profile (AVC-Intra100/ AVC-Intra50)
DV base (SMPTE370M/DVCPRO HD, SMPTE314M/DVCPRO50)

Digital Audio System

Sampling frequency:
48 kHz (synchronised with video)
Quantizing: 16 bits
Frequency response:
20 Hz - 20 kHz ± 1.0 dB
(at standard level)
Dynamic range: Minimum 85 dB (1 kHz, AWTD)
Distortion factor: 0.1% or less (1 kHz, standard level)
Headroom: 18/20 dB (selectable with menu)

Input/output Unit

GEN LOCK IN: BNC×1, 1.0 Vp-p, 75 Ω
(This is available as VIDEO IN or the return video input connector, which can be switched in the menu.)

MON OUT: BNC×1, 1.0 Vp-p, 75 Ω

VIDEO OUT : BNC×1
(It can be switched among HD-SDI/SD-SDI/Composite.)
- HD-SDI: 0.8 Vp-p, 75 Ω (Compliant with the SMPTE292M/299M standards)
- SD-SDI: 0.8 Vp-p, 75 Ω (Compliant with the SMPTE259M-C/272M-A/ITU-R. BT656-4 standards)
- Composite: 1.0 Vp-p, 75 Ω

TC IN: BNC×1, 0.5 Vp-p to 8 Vp-p, 10 kΩ

TC OUT: BNC×1, low impedance, 2.0 ± 0.5 Vp-p

DVCPRO : 6 pins (I/O)
Transmission rate:
400, 200, or 100 Mbps (selectable)
Transmission data:
compliant with IEEE1394 - 1995/ 1394a - 2000, IEC 61883-1 and 2, and SMPTE 396M
Control commands:
compliant with the AV/C Command Set standards.

SDI-OUT : BNC×1, 0.8 Vp-p, 75 Ω
- HD: Compliant with the SMPTE292M/ 299M standards
- SD: Compliant with the SMPTE259M-C/272M-A/ITU-R.BT656-4 standards

SDI-IN : BNC×1, 0.8 Vp-p, 75 Ω
(HD/SD-SDI input board AJ-YA350AG (option) is attached.)
- HD: Compliant with the SMPTE292M/ 299M standards
- SD: Compliant with the SMPTE259M-C/272M-A/ITU-R.BT656-4 standards

AUDIO IN CH1/CH2:
XLR × 2, 3 pins
LINE, MIC, and MIC +48 V switch-selectable
- LINE: +4 dBu (–3 dBu/0 dBu/+4 dBu selectable with menu)
- MIC: –60 dBu (–60 dBu/–50 dBu selectable with menu)
- MIC + 48V: Compatible with +48V phantom power supply –60 dBu (–60 dBu/–50 dBu selectable with menu)

MIC IN: XLR × 1, 5 pins
+48 V phantom: ON/OFF selectable with menu
–40 dBu
(–50 dBu/–40 dBu selectable with menu)

WIRELESS IN: 25 pin D-SUB, –40 dBu

AUDIO OUT CH1/CH2:
XLR × 1, 5 pins, +4 dBu
(–3 dBu/0 dBu/+4 dBu selectable with menu)
Balanced low-impedance output

Headphones : Stereo mini jack × 2

DC IN: XLR × 1, 4 pins, DC 12 V (DC 11 V - 17 V)

DC OUT: 4 pins, DC 12 V (DC 11 V - 17 V)
Maximum rated current: 1.5 A

LENS: 12 pins

EVF: 20 pins

REMOTE: 10 pins (connector for AJ-RC10G)

GPS: 6 pins (connector for AJ-GPS910G)

USB version 2.0 :
- HOST: 4-pin, Type-A connector
- DEVICE: 4-pin, Type-B connector

Accessories

Shoulder Strap
Front Audio Level control knob
Control knob mounting screw×1
CD-ROM
Operating Instructions

Weight and dimentions when shown are approximately.
Specifications are subject to change without notice.

Software information for this product

1. Customer advisory: This product includes software licensed under the GNU General Public License (GPL) and GNU Lesser General Public License (LGPL); customers have the right to download, modify, and redistribute source code for this software.

   Descriptions of the GPL and LGPL are stored on the installation CD included with this camera-recorder. See the folder named \LDOC. (The description is the original (written in English)). To download the relevant source code, visit https://eww.pavc.panasonic.co.jp/pro-av/.
   Please note that we cannot answer any questions you may have about the content, etc. of any source code you may obtain from the above Web site.

2. This product includes software licensed under the MIT License. A description of the MIT is stored on the installation CD included with this camera-recorder. See the folder named \LDOC. (The description is the original (written in English)).

This product is licensed under the AVC patent portfolio license for the personal and non-commercial use of a consumer to (i) encode video in compliance with the AVC Standard (“AVC Video”) and/or (ii) decode AVC Video that was encoded by a consumer engaged in a personal and non-commercial activity and/or was obtained from a video provider licensed to provide AVC Video. No license is granted or shall be implied for any other use. Additional information may be obtained from MPEG LA, LLC.
See http://www.mpegla.com.

- Unislot is a trademark of Ikegami Tsushinki Co., Ltd.
- Other names of companies and products are trademarks or registered trademarks of the respective companies.

Information on Disposal for Users of Waste Electrical & Electronic Equipment (private households)

This symbol on the products and/or accompanying documents means that used electrical and electronic products should not be mixed with general household waste.
For proper treatment, recovery and recycling, please take these products to designated collection points, where they will be accepted on a free of charge basis. Alternatively, in some countries you may be able to return your products to your local retailer upon the purchase of an equivalent new product.
Disposing of this product correctly will help to save valuable resources and prevent any potential negative effects on human health and the environment which could otherwise arise from inappropriate waste handling. Please contact your local authority for further details of your nearest designated collection point.
Penalties may be applicable for incorrect disposal of this waste, in accordance with national legislation.

For business users in the European Union

If you wish to discard electrical and electronic equipment, please contact your dealer or supplier for further information.

Information on Disposal in other Countries outside the European Union

This symbol is only valid in the European Union.
If you wish to discard this product, please contact your local authorities or dealer and ask for the correct method of disposal.

Panasonic®

Panasonic Broadcast & Television Systems Company
Unit Company of Panasonic Corporation of North America

Executive Office:
One Panasonic Way 4E-7, Secaucus, NJ 07094 (201) 348-7000
EASTERN ZONE:
One Panasonic Way 4E-7, Secaucus, NJ 07094 (201) 348-7196
Southeast Region: (201) 348-7162
WESTERN ZONE:
3330 Cahuenga Blvd W., Los Angeles, CA 90068 (323) 436-3500
Government Marketing Department:
One Panasonic Way 2E-10, Secaucus, NJ 07094 (201) 348-7587
Broadcast PARTS INFORMATION & ORDERING:
9:00 a.m. – 5:00 p.m. (EST) (800) 334-4881/24 Hr. Fax (800) 334-4880
Emergency after hour parts orders (800) 334-4881
TECHNICAL SUPPORT:
Emergency 24 Hour Service (800) 222-0741

Panasonic Canada Inc.
5770 Ambler Drive, Mississauga, Ontario L4W 2T3 (905) 624-5010

Panasonic de Mexico S.A. de C.V.
Av angel Urraza Num. 1209 Col. de Valle 03100 Mexico, D.F. (52) 1 951 2127

Panasonic Puerto Rico Inc.
San Gabriel Industrial Park, 65th Infantry Ave., Km. 9.5, Carolina, Puerto Rico 00630 (787) 750-4300

Professional & Broadcast IT Systems Business Unit Europe
Panasonic AVC Systems Europe a Division of Panasonic Marketing Europe GmbH
Hagenauer Str. 43, 65203 Wiesbaden-Biebrich Deutschland Tel: 49-611-235-481

© 2007 Matsushita Electric Industrial Co., Ltd. All Rights Reserved.

G